LOT 471
EX MINERAL RIGHTS PT 1826/1193
NORTH HAMPTON PHASE 3 PB 7/16

RIGSBY ROGER L & JULIE
862174 NORTH HAMPTON CLUB WAY
FERNANDINA BEACH, FL 32034

2023

12-2N-27-1460-0471-0000

BUILDING CHARACTERISTICS

ELEMENT	CD	CONSTRUCTION
Exterior Wall	16	WD FR STUC 100
Roof Structur	08	IRREGULAR 100
Roof Cover	03	COMP SHNGL 100
Interior Wall	05	DRYWALL 100
Interior Floo	14	CARPET 60
Interior Floo	11	CLAY TILE 40
Air Condition	03	CENTRAL 100
Heating Type	04	AIR DUCTED 100
Bedrooms		5 100
Bathrooms		4 100
Frame	02	WOOD FRAME 100
Stories	1.5	1.5 100
Units		0 100
Occupancy	00	NONE 100
Quality	04	Quality Level 04
DOR CODE	0100	SINGLE FAMILY
MAP NUM		MKT AREA 04
NEIGHBORHOOD/LOC	4043.00	

AREA TYPE	TOTAL GROSS AREA	PCT OF BASE	TOT ADJ AREA	SUBAREA MARKET VALUE
BAS	2,330	100	2,330	300,715
FGR	580	55	319	41,171
FOP	48	30	14	1,807
FSP	210	40	84	10,841
FUS	560	100	560	72,275
TOTALS	3,728		3,307	426,809

MARKET ADJUSTMENTS

TYPE	MDL	EFF. AREA	TOT ADJ PTS	EFF. BASE RATE	REPL. COST NEW	AYB	EYB	ECON	FNCT		NORM	% COND
0900	01	3,307	113.2152	134.44	444,593	2014	2014	0	0	0	4.00	96.00

1 SNGL FAM – 100% - 2020 Heated Area: 2890 HX Base Yr 2020

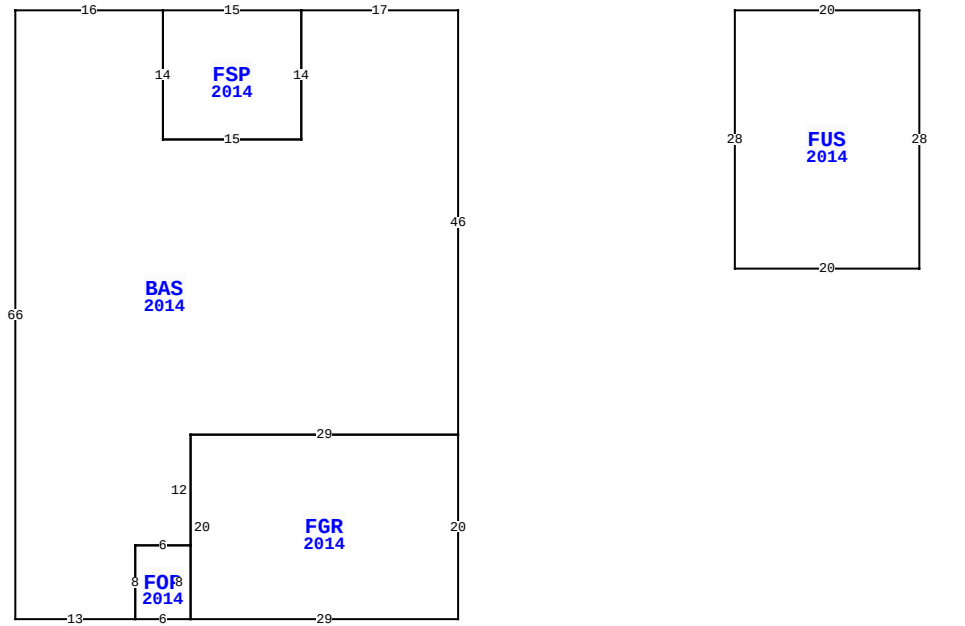

862174 NORTH HAMPTON CLUB WAY, FERNANDINA BEACH

BLD DATE	03/29/2023	NW	LGL DATE		
XF DATE	09/16/2020	KKA	LAND DATE	09/16/2020	KKA
INC DATE			AG DATE		

NASSAU COUNTY PROPERTY

PAGE 1 of 1 4

VALUATION SUMMARY

VALUATION BY		STANDARD
Tax Group: 4	Tax Dist:	
BUILDING MARKET VALUE		426,809
TOTAL MARKET OB/XF VALUE		19,718
TOTAL LAND VALUE - MARKET		105,000
TOTAL MARKET VALUE		551,527
SOH/AGL Deduction		191,087
ASSESSED VALUE		360,440
TOTAL EXEMPTION VALUE	HX HB	50,000
BASE TAXABLE VALUE		310,440
TOTAL JUST VALUE		551,527
NCON VALUE		0
INCOME VALUE		
PREVIOUS YEAR MKT VALUE		441,099

PERMIT NUM	DESCRIPTION	AMT	ISSUED
20011905	SCRN ENCL	30,000	12/02/2020
B1327266	CO ISSUED	0	02/20/2014
B1327266	NEW CONSTR	0	06/01/2013

SALES DATA

OFF RECORD Number	DATE	TYPE INST	Q / U	V / I	RSN CD	SALE PRICE
2306/0591	9/17/2019	WD	Q	I	02	351,500
GRANTOR: GOAD KIRBY C & JOHN T						
GRANTEE: RIGSBY ROGER L & JU						
1905/1041	2/28/2014	SW	Q	I	01	310,500
GRANTOR: D R HORTON INC-JACKSO						
GRANTEE: GOAD KIRBY COLEMAN						

BUILDING NOTES

EXTRA FEATURES

L N	OB/XF CODE	DESCRIPTION	BLD	CAP	L	W	UNITS	UT	Adj R	ADJ UNIT PRICE	ORIG COND	YEAR ON	YEAR ACTUAL	Q	% COND	OB/XF MKT VALUE	NOTES
1	0810	CONCRETE A	0	100	0	0	948.00	SF	6.50	6.50	100	2014	2014	3	95	5,854	
2	0911	SCRN RM A	0	100	0	0	417.00	SF	21.00	21.00	100	2021	2021	3	97	8,494	
3	0855	CONC PAVER	0	100	12	10	120.00	SF	10.00	10.00	100	2021	2021	3	100	1,200	
4	0855	CONC PAVER	0	100	0	0	417.00	SF	10.00	10.00	100	2021	2021	3	100	4,170	

BUILDING DIMENSIONS

BAS=[YR=2014] W17 FSP=[YR=2014] W15 S14 E15 N14 $ S14 W15 N14 W16 S66 E13 FOP=[YR=2014] E6 FGR=[YR=2014] E29 N20 W29 S20 $ N8 W6 S8 $ N8 E6 N12 E29 N46 $ PTR= E30 FUS=[YR=2014] E20 S28 W20 N28 $ W30 $.

LAND DESCRIPTION

TOTAL OB/XF 19,718

L N	USE CODE	CLS	LAND USE DESCRIPTION	CAP	R D	LOC ZONE	FRONT	DEPTH	TOT LND UTS	UNIT TYPE	D T	DPTH FACT	% COND	TOT ADJ	UNIT PRICE	ADJ UNIT PRICE	LAND VALUE	OTHER ADJUSTMENTS AND NOTES	YEAR	DENSITY	DECL	FRZ	YR	CONSRV
1	000141	C	SFR GOLF B	100		PUD	0.00	0.00	1.00	LT		1.00	1.00	1.00	105,000.00	105,000.00	105,000							

REVIEW DATE 04/19/2021 BY NW Total Acres: 0.00 Total Land Value: 105,000 Market: 0 Agricultural: 0 Common: 105,000 PRINTED 08/02/2023 BY SYS