LOT 332
IN OR 1394/136
NORTH HAMPTON PHASE 2 PB 6/328

WEIR JUANITA R EST
C/O JUSTIN C WEIR, 85162 AMAGANSETT DRIVE
FERNANDINA BEACH, FL 32034-8711

2023

12-2N-27-1460-0332-0000

BUILDING CHARACTERISTICS

ELEMENT	CD	CONSTRUCTION
Exterior Wall	16	WD FR STUC 90
Exterior Wall	21	STONE 10
Roof Structur	08	IRREGULAR 100
Roof Cover	03	COMP SHNGL 100
Interior Wall	05	DRYWALL 100
Interior Floo	11	CLAY TILE 50
Interior Floo	14	CARPET 50
Air Condition	03	CENTRAL 100
Heating Type	04	AIR DUCTED 100
Bedrooms		4 100
Bathrooms		2 100
Frame	02	WOOD FRAME 100
Stories	1.	1. 100
Units		0 100
Occupancy	00	NONE 100
Quality	04	Quality Level 04
DOR CODE	0100	SINGLE FAMILY
MAP NUM		MKT AREA 04
NEIGHBORHOOD/LOC	4043.00	

AREA TYPE	TOTAL GROSS AREA	PCT OF BASE	TOT ADJ AREA	SUBAREA MARKET VALUE
BAS	2,397	100	2,397	299,644
FGR	442	55	243	30,377
FOP	56	30	17	2,125
FSP	260	40	104	13,001
TOTALS	3,155		2,761	345,146

MARKET ADJUSTMENTS

TYPE	MDL	EFF. AREA	TOT ADJ PTS	EFF. BASE RATE	REPL. COST NEW	AYB	EYB	ECON	FNCT		NORM	% COND
0900	01	2,761	116.3232	138.13	381,377	2003	2003	0	0	0	9.50	90.50

1 SNGL FAM – 100% - 2023 Heated Area: 2397 HX Base Yr 2023

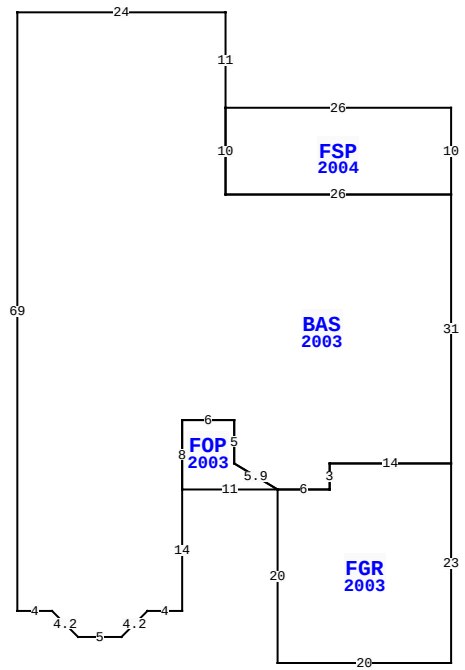

BLD DATE	03/29/2023	NW	LGL DATE
XF DATE			LAND DATE
INC DATE			AG DATE

85162 AMAGANSETT DR, FERNANDINA BEACH

NASSAU COUNTY PROPERTY

PAGE 1 of 1 4

VALUATION SUMMARY

VALUATION BY		STANDARD
Tax Group: 4	Tax Dist:	
BUILDING MARKET VALUE		345,146
TOTAL MARKET OB/XF VALUE		6,207
TOTAL LAND VALUE - MARKET		127,500
TOTAL MARKET VALUE		478,853
SOH/AGL Deduction		0
ASSESSED VALUE		478,853
TOTAL EXEMPTION VALUE	HX HB	50,000
BASE TAXABLE VALUE		428,853
TOTAL JUST VALUE		478,853
NCON VALUE		0
INCOME VALUE		
PREVIOUS YEAR MKT VALUE		371,047

PERMIT NUM	DESCRIPTION	AMT	ISSUED
B25151	REPAIR/RRF	8,860	09/01/2011
B24893	REPAIR/RRF	3,970	07/01/2011
B0310853	NEW CONSTR	184,990	01/01/2003

SALES DATA

OFF RECORD Number	DATE	TYPE INST	Q / U	V / I	RSN CD	SALE PRICE
1394/0136	3/07/2006	WD	Q	I		347,500
GRANTOR: DELOACH WHITNEY E & C						
GRANTEE: WEIR JUANITA R						
1200/1371	1/09/2004	WD	U	I	21	272,100
GRANTOR: MORRISON HOMES INC						
GRANTEE: DELOACH WHITNEY E &						

BUILDING NOTES

BUILDING DIMENSIONS

FSP=[YR=2004] W26 BAS=[YR=2003] N11 W24 S69 E4 D3 R3 E5 U3 R3 E4 N14 FOP=[YR=2003] E11 U3 L5 N5 W6 S8$ N8 E6 S5 R5 D3 FGR=[YR=2003] S20 E20 N23 W14 S3 W6$ E6 N3 E14 N31 W26 N10$ S10 E26 N10$.

EXTRA FEATURES

LN	OB/XF CODE	DESCRIPTION	BLD	CAP	L	W	UNITS	UT	Adj R	ADJ UNIT PRICE	ORIG COND	YEAR ON	YEAR ACTUAL	Q	% COND	OB/XF MKT VALUE	NOTES
1	0811	CONCRETE B	0	100	0	0	716.00	SF	5.20	5.20	100	2003	2003	3	84	3,127	
2	0500	FP-PRE FAB	0	100	0	0	1.00	UT	3,500.00	3,500.00	100	2003	2003	3	88	3,080	

LAND DESCRIPTION

TOTAL OB/XF 6,207

LN	USE CODE	CLS	LAND USE DESCRIPTION	CAP	RD	LOC ZONE	FRONT	DEPTH	TOT LND UTS	UNIT TYPE	DT	DPTH FACT	% COND	TOT ADJ	UNIT PRICE	ADJ UNIT PRICE	LAND VALUE	OTHER ADJUSTMENTS AND NOTES	YEAR	DENSITY	DECL	FRZ	YR	CONSRV
1	000135	C	SFR CNSVTN	100			0.00	0.00	1.00	LT		1.00	1.00	1.00	127,500.00	127,500.00	127,500							

REVIEW DATE 01/06/2023 BY NWA Total Acres: 0.00 Total Land Value: 127,500 Market: 0 Agricultural: 0 Common: 127,500 PRINTED 08/02/2023 BY SYS