LOT 139
NORTH HAMPTON PHASE 1 PB 6/215

CHAMBERS JOHN E
96029 ROXABOGUE DRIVE
FERNANDINA BEACH, FL 32034

2023

12-2N-27-1460-0139-0000

NASSAU COUNTY PROPERTY

BUILDING CHARACTERISTICS

ELEMENT	CD	CONSTRUCTION
Exterior Wall	16	WD FR STUC 100
Roof Structur	08	IRREGULAR 100
Roof Cover	03	COMP SHNGL 100
Interior Wall	05	DRYWALL 100
Interior Floo	14	CARPET 60
Interior Floo	11	CLAY TILE 40
Air Condition	03	CENTRAL 100
Heating Type	04	AIR DUCTED 100
Bedrooms		5 100
Bathrooms		4 100
Frame	02	WOOD FRAME 100
Stories	2.	2. 100
Units		0 100
Occupancy	00	NONE 100
Quality	04	Quality Level 04
DOR CODE	0100	SINGLE FAMILY
MAP NUM		MKT AREA 04
NEIGHBORHOOD/LOC	4043.00	

AREA TYPE	TOTAL GROSS AREA	PCT OF BASE	TOT ADJ AREA	SUBAREA MARKET VALUE
BAS	2,575	100	2,575	303,104
FGR	590	55	324	38,138
FOP	48	30	14	1,648
FOP	81	30	24	2,825
FOP	153	30	46	5,415
FUS	528	100	528	62,151
PTO	170	5	8	942
TOTALS	4,145		3,519	414,223

MARKET ADJUSTMENTS

TYPE	MDL	EFF. AREA	TOT ADJ PTS	EFF. BASE RATE	REPL. COST NEW	AYB	EYB	ECON	FNCT		NORM	% COND
0900	01	3,519	110.7540	131.52	462,819	2001	2001	0	0	0	10.50	89.50

1 SNGL FAM – 100% - 2004 Heated Area: 3103 HX Base Yr 2004

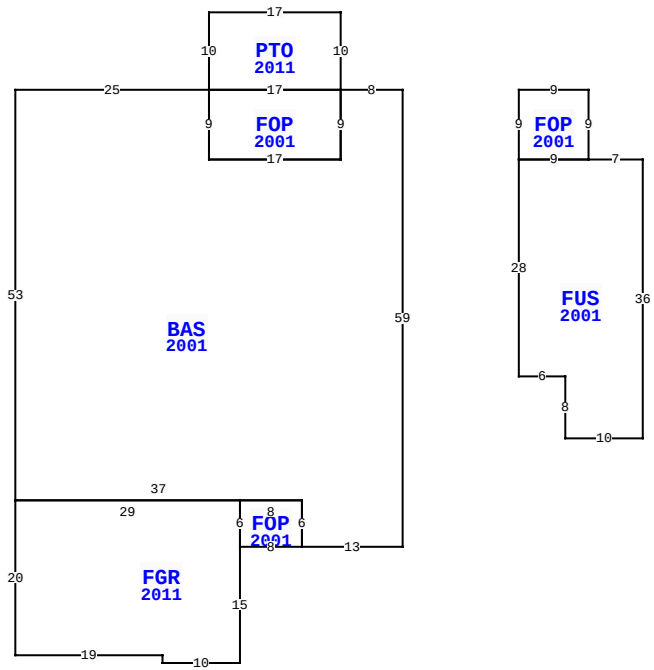

96029 ROXABOGUE DR, FERNANDINA BEACH

BLD DATE	03/29/2023 NW	LGL DATE	
XF DATE		LAND DATE	
INC DATE		AG DATE	

VALUATION SUMMARY

VALUATION BY		STANDARD
Tax Group: 4	Tax Dist:	
BUILDING MARKET VALUE		414,223
TOTAL MARKET OB/XF VALUE		9,143
TOTAL LAND VALUE - MARKET		127,500
TOTAL MARKET VALUE		550,866
SOH/AGL Deduction		293,650
ASSESSED VALUE		257,216
TOTAL EXEMPTION VALUE	HX HB	50,000
BASE TAXABLE VALUE		207,216
TOTAL JUST VALUE		550,866
NCON VALUE		0
INCOME VALUE		
PREVIOUS YEAR MKT VALUE		430,093

PERMIT NUM	DESCRIPTION	AMT	ISSUED

SALES DATA

OFF RECORD Number	DATE	TYPE INST	Q / U	V / I	RSN CD	SALE PRICE
2620/1519	2/08/2023	QC	U	I	11	100
GRANTOR: CHAMBERS CECELIA						
GRANTEE: CHAMBERS JOHN E						
1111/0597	2/04/2003	WD	Q	I		313,900
GRANTOR: MORRISON HOMES INC						
GRANTEE: CHAMBERS JOHN E & C						

BUILDING NOTES

BUILDING DIMENSIONS

BAS=[YR=2001] W8PTO=[YR=2011] N10 W17 S10 E17 $
FOP=[YR=2001] W17 S9 E17N9 $ S9 W17 N9 W25 S53FGR=[YR=2011]
S20 E19 S1 E10 N15FOP=[YR=2001] E8 N6 W8 S6 $N6W29$ E37 S6
E13 N59 $ PTR= E15 FOP=[YR=2001] E9 S9 FUS=[YR=2001] E7
S36W10 N8 W6 N28 E9 $ W9 N9 $ W15$.

EXTRA FEATURES

LN	OB/XF CODE	DESCRIPTION	BLD	CAP	L	W	UNITS	UT	Adj R	ADJ UNIT PRICE	ORIG COND	YEAR ON	YEAR ACTUAL	Q	% COND	OB/XF MKT VALUE	NOTES
1	0500	FP-PRE FAB	0	100	0	0	1.00	UT	3,500.00	3,500.00	100	2001	2001	3	86	3,010	
2	0855	CONC PAVER	0	100	0	0	136.00	SF	10.00	10.00	100	2001	2001	3	82	1,115	
3	0811	CONCRETE B	0	100	0	0	928.00	SF	5.20	5.20	100	2003	2003	3	84	4,054	
4	0910	SCRN RM L	0	100	10	17	170.00	SF	15.00	15.00	100	2003	2003	3	22	561	
5	1126	CB/STC 8"	0	100	0	0	60.00	SF	8.00	8.00	100	2003	2003	3	84	403	

LAND DESCRIPTION

TOTAL OB/XF 9,143

LN	USE CODE	CLS	LAND USE DESCRIPTION	CAP	RD	LOC ZONE	FRONT	DEPTH	TOT LND UTS	UNIT TYPE	DT	DPTH FACT	% COND	TOT ADJ	UNIT PRICE	ADJ UNIT PRICE	LAND VALUE	OTHER ADJUSTMENTS AND NOTES	YEAR	DENSITY	DECL	FRZ	YR	CONSRV
1	000135	C	SFR CNSVTN	100		PUD	0.00	0.00	1.00	LT		1.00	1.00	1.00	127,500.00	127,500.00	127,500							

REVIEW DATE 04/06/2021 BY NWA Total Acres: 0.00 Total Land Value: 127,500 Market: 0 Agricultural: 0 Common: 127,500 PRINTED 08/02/2023 BY SYS