LOT 102
IN OR 2002/277
NORTH HAMPTON PHASE 1 PB 6/215

IH5 PROPERTY FLORIDA LP
C/O INVITATION HOMES-TAX DEPT, 1717 MAIN ST, STE 2000
DALLAS, TX 75201

2023

12-2N-27-1460-0102-0000

BUILDING CHARACTERISTICS

ELEMENT	CD	CONSTRUCTION
Exterior Wall	16	WD FR STUC 100
Roof Structur	08	IRREGULAR 100
Roof Cover	03	COMP SHNGL 100
Interior Wall	05	DRYWALL 100
Interior Floo	11	CLAY TILE 70
Interior Floo	14	CARPET 30
Air Condition	03	CENTRAL 100
Heating Type	04	AIR DUCTED 100
Bedrooms		3 100
Bathrooms		2.5 100
Frame	02	WOOD FRAME 100
Stories	2.	2. 100
Units		0 100
Occupancy	00	NONE 100
Quality	04	Quality Level 04
DOR CODE	0100	SINGLE FAMILY
MAP NUM		MKT AREA 04
NEIGHBORHOOD/LOC	4043.00	

AREA TYPE	TOTAL GROSS AREA	PCT OF BASE	TOT ADJ AREA	SUBAREA MARKET VALUE
BAS	1,619	100	1,619	207,725
DCK	112	10	11	1,411
FGR	507	55	279	35,797
FOP	40	30	12	1,540
FSP	136	40	54	6,928
FUS	667	100	667	85,579
PTO	216	5	11	1,411
TOTALS	3,297		2,653	340,391

MARKET ADJUSTMENTS

TYPE	MDL	EFF. AREA	TOT ADJ PTS	EFF. BASE RATE	REPL. COST NEW	AYB	EYB	ECON	FNCT		NORM	% COND
0900	01	2,653	120.0528	142.56	378,212	2002	2002	0	0	0	10.00	90.00

1 SNGL FAM – 0% - 0 Heated Area: 2286 HX Base Yr

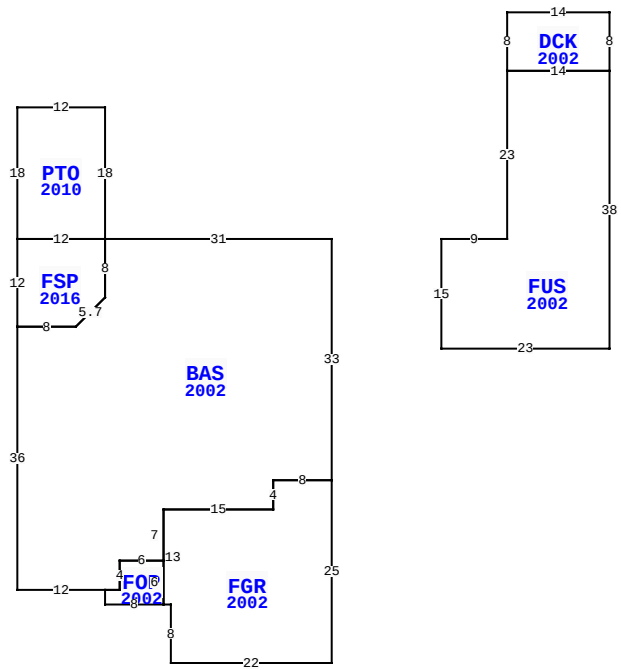

86454 EASTPORT DR, FERNANDINA BEACH

BLD DATE	03/29/2023 NW	LGL DATE	
XF DATE		LAND DATE	
INC DATE		AG DATE	

NASSAU COUNTY PROPERTY

PAGE 1 of 1 4

VALUATION SUMMARY

VALUATION BY	STANDARD
Tax Group: 4	Tax Dist:
BUILDING MARKET VALUE	340,391
TOTAL MARKET OB/XF VALUE	16,861
TOTAL LAND VALUE - MARKET	105,000
TOTAL MARKET VALUE	462,252
SOH/AGL Deduction	113,751
ASSESSED VALUE	348,501
TOTAL EXEMPTION VALUE	0
BASE TAXABLE VALUE	348,501
TOTAL JUST VALUE	462,252
NCON VALUE	0
INCOME VALUE	
PREVIOUS YEAR MKT VALUE	368,346

PERMIT NUM	DESCRIPTION	AMT	ISSUED

SALES DATA

OFF RECORD Number	DATE	TYPE INST	Q U	V I	RSN CD	SALE PRICE
2002/0277	9/02/2015	WD	Q	I	01	270,000
GRANTOR: DUBOSE STEPHEN E & CH						
GRANTEE: IH5 PROPERTY FLORID						
1916/1246	5/09/2014	WD	Q	I	01	280,000
GRANTOR: HACKETT JOAN D						
GRANTEE: DUBOSE STEPHEN E &						

BUILDING NOTES

BUILDING DIMENSIONS

BAS=[YR=2002] W31PTO=[YR=2010] N18 W12 S18 E12$
FSP=[YR=2016] W12 S12 E8 U4 R4 N8$ S8 D4 L4 W8 S36 E12
FOP=[YR=2002] S2 E8 FGR=[YR=2002] E1 S8 E22 N25 W8 S4 W15
S13 $ N6 W6 S4 W2 $ E2 N4 E6 N7 E15 N4 E8 N33 $ PTR= E15
FUS=[YR=2002] E9 N23DCK=[YR=2002] N8 E14 S8 W14 $ E14 S38
W23 N15 $ W15 $.

EXTRA FEATURES

LN	OB/XF CODE	DESCRIPTION	BLD	CAP	L	W	UNITS	UT	Adj R	ADJ UNIT PRICE	ORIG COND	YEAR ON	YEAR ACTUAL	Q	% COND	OB/XF MKT VALUE	NOTES
1	0500	FP-PRE FAB	0	0	0	0	1.00	UT	3,500.00	3,500.00	100	2002	2002	3	87	3,045	
3	0462	ST/AL FNC	0	0	0	0	288.00	SF	10.00	10.00	100	2002	2002	3	32	922	
5	0911	SCRN RM A	0	0	12	18	216.00	SF	17.50	17.50	100	2004	2004	3	24	907	
6	0855	CONC PAVER	0	0	0	0	664.00	SF	10.00	10.00	100	2011	2011	3	93	6,175	
7	0855	CONC PAVER	0	0	0	0	287.00	SF	10.00	10.00	100	2011	2011	3	93	2,669	
8	0855	CONC PAVER	0	0	0	0	134.00	SF	10.00	10.00	100	2011	2011	3	93	1,246	
9	0835	QUARY TILE	0	0	0	0	204.00	SF	10.00	10.00	100	2011	2011	3	93	1,897	

LAND DESCRIPTION

TOTAL OB/XF 16,861

LN	USE CODE	CLS	LAND USE DESCRIPTION	CAP	RD	LOC ZONE	FRONT	DEPTH	TOT LND UTS	UNIT TYPE	DT	DPTH FACT	% COND	TOT ADJ	UNIT PRICE	ADJ UNIT PRICE	LAND VALUE	OTHER ADJUSTMENTS AND NOTES	YEAR	DENSITY	DECL	FRZ	YR	CONSRV
1	000141	C	SFR GOLF B	0	0003	PUD	0.00	0.00	1.00	LT		1.00	1.00	1.00	105,000.00	105,000.00	105,000							

REVIEW DATE 10/06/2017 BY KWX Total Acres: 0.00 Total Land Value: 105,000 Market: 0 Agricultural: 0 Common: 105,000 PRINTED 08/02/2023 BY SYS