LOT 80
PLUMMER CREEK PHASE TWO C & D
OR 2223/684

MURRELL SANDRA M
79218 PLUMMERS CREEK DR
YULEE, FL 32097

2023

12-2N-26-1604-0080-0000

BUILDING CHARACTERISTICS

ELEMENT	CD	CONSTRUCTION
Exterior Wall	10	ABOVE AVG 100
Roof Structur	03	GABLE/HIP 100
Roof Cover	03	COMP SHNGL 100
Interior Wall	05	DRYWALL 100
Interior Floo	11	CLAY TILE 70
Interior Floo	14	CARPET 30
Air Condition	03	CENTRAL 100
Heating Type	04	AIR DUCTED 100
Bedrooms		3 100
Bathrooms		2 100
Frame	02	WOOD FRAME 100
Stories	1.	1. 100
Units		0 100
Occupancy	00	NONE 100
Quality	04	Quality Level 04
DOR CODE	0100	SINGLE FAMILY
MAP NUM		MKT AREA 05
NEIGHBORHOOD/LOC	5015.00	

AREA TYPE	TOTAL GROSS AREA	PCT OF BASE	TOT ADJ AREA	SUBAREA MARKET VALUE
BAS	1,752	100	1,752	190,237
FGR	460	55	253	27,472
FOP	42	30	13	1,412
FOP	102	30	31	3,366
PTO	143	5	7	760
TOTALS	2,499		2,056	223,247

MARKET ADJUSTMENTS

TYPE	MDL	EFF. AREA	TOT ADJ PTS	EFF. BASE RATE	REPL. COST NEW	AYB	EYB	ECON	FNCT		NORM	% COND
0100	01	2,056	121.5249	109.68	225,502	2019	2019	0	0	0	1.00	99.00

1 SINGLE FAM – 0% - 0 Heated Area: 1752 HX Base Yr

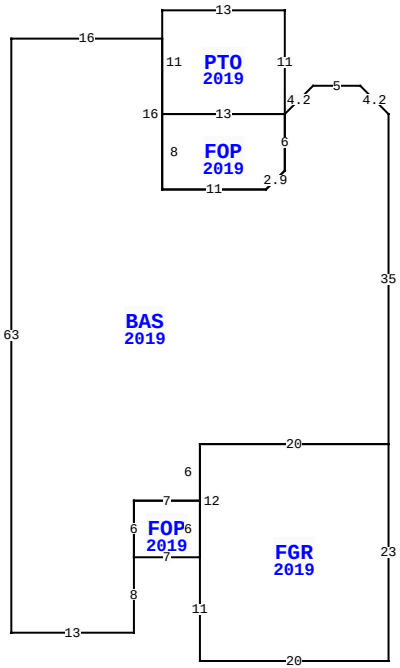

79218 PLUMMERS CREEK DR, YULEE

BLD DATE		LGL DATE	
XF DATE		LAND DATE	
INC DATE		AG DATE	

NASSAU COUNTY PROPERTY

PAGE 1 of 1 4

VALUATION SUMMARY

VALUATION BY	STANDARD
Tax Group: 4	Tax Dist:
BUILDING MARKET VALUE	223,247
TOTAL MARKET OB/XF VALUE	4,537
TOTAL LAND VALUE - MARKET	55,000
TOTAL MARKET VALUE	282,784
SOH/AGL Deduction	20,672
ASSESSED VALUE	262,112
TOTAL EXEMPTION VALUE	0
BASE TAXABLE VALUE	262,112
TOTAL JUST VALUE	282,784
NCON VALUE	0
INCOME VALUE	
PREVIOUS YEAR MKT VALUE	238,284

PERMIT NUM	DESCRIPTION	AMT	ISSUED
19010146	CO ISSUED	0	09/26/2019
19004512	NEW CONSTR	242,023	05/01/2019

SALES DATA

OFF RECORD Number	DATE	TYPE INST	Q / U	V / I	RSN CD	SALE PRICE
2310/0633	9/25/2019	WD	Q	I	02	259,700
GRANTOR: DREAM FINDERS HOMES L						
GRANTEE: MURRELL SANDRA M						
2270/1337	4/25/2019	WD	Q	V	05	236,000
GRANTOR: BWC LAND PLUMMER LLC						
GRANTEE: DREAM FINDERS HOMES						

BUILDING NOTES

BUILDING DIMENSIONS

BAS=[YR=2019] U3 L3 W5 D3 L3 PTO=[YR=2019] N11 W13 S11 FOP=[YR=2019] S8 E11 U2 R2 N6 W13$ E13$S6 D2 L2 W11 N16 W16 S63 E13 N8 FOP=[YR=2019] E7 FGR=[YR=2019] S11 E20 N23 W20 S12$ N6 W7 S6$ N6 E7 N6 E20 N35$.

EXTRA FEATURES

LN	OB/XF CODE	DESCRIPTION	BLD	CAP	L	W	UNITS	UT	Adj R	ADJ UNIT PRICE	ORIG COND	YEAR ON	YEAR ACTUAL	Q	% COND	OB/XF MKT VALUE	NOTES
1	0810	CONCRETE A	0	0	0	0	705.00	SF	6.50	6.50	100	2019	2019	3	99	4,537	

LAND DESCRIPTION

TOTAL OB/XF 4,537

LN	USE CODE	CLS	LAND USE DESCRIPTION	CAP	RD	LOC ZONE	FRONT	DEPTH	TOT LND UTS	UNIT TYPE	DT	DPTH FACT	% COND	TOT ADJ	UNIT PRICE	ADJ UNIT PRICE	LAND VALUE	OTHER ADJUSTMENTS AND NOTES	YEAR	DENSITY	DECL	FRZ	YR	CONSRV
1	000100	C	SFR	0			0.00	0.00	1.00	LT		1.00	1.00	1.00	55,000.00	55,000.00	55,000							

REVIEW DATE 08/15/2019 BY KB Total Acres: 0.00 Total Land Value: 55,000 Market: 0 Agricultural: 0 Common: 55,000 PRINTED 08/02/2023 BY SYS