LOT 37
IN OR 2185/1477
PLUMMER CREEK PHASE TWO B

DUGGANS MARCUS ERIC & KELSIE
78705 GOLDFINCH LANE
YULEE, FL 32097

2023

12-2N-26-1603-0037-0000

BUILDING CHARACTERISTICS

ELEMENT	CD	CONSTRUCTION
Exterior Wall	10	ABOVE AVG 100
Roof Structur	03	GABLE/HIP 100
Roof Cover	03	COMP SHNGL 100
Interior Wall	05	DRYWALL 100
Interior Floo	11	CLAY TILE 50
Interior Floo	14	CARPET 50
Air Condition	03	CENTRAL 100
Heating Type	04	AIR DUCTED 100
Bedrooms		3 100
Bathrooms		2 100
Frame	02	WOOD FRAME 100
Stories	1.	1. 100
Units		0 100
Occupancy	00	NONE 100
Quality	04	Quality Level 04

DOR CODE 0100 SINGLE FAMILY
MAP NUM | MKT AREA 05
NEIGHBORHOOD/LOC 5014.00

AREA TYPE	TOTAL GROSS AREA	PCT OF BASE	TOT ADJ AREA	SUBAREA MARKET VALUE
BAS	1,904	100	1,904	199,415
FGR	670	55	368	38,542
FOP	126	30	38	3,980
PTO	54	5	3	314
PTO	72	5	4	419
USP	128	30	38	3,980
TOTALS	2,954		2,355	246,651

MARKET ADJUSTMENTS

TYPE	MDL	EFF. AREA	TOT ADJ PTS	EFF. BASE RATE	REPL. COST NEW	AYB	EYB	ECON	FNCT		NORM	% COND
0100	01	2,355	117.8205	106.33	250,407	2018	2018	0	0	0	1.50	98.50

1 SINGLE FAM – 100% - 2019 Heated Area: 1904 HX Base Yr 2019

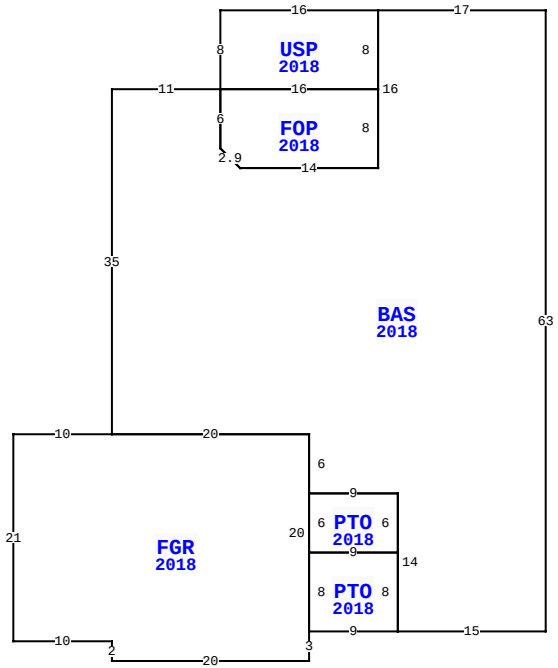

78705 GOLDFINCH LN, YULEE

BLD DATE		LGL DATE	
XF DATE		LAND DATE	
INC DATE		AG DATE	

NASSAU COUNTY PROPERTY

PAGE 1 of 1 4

VALUATION SUMMARY

VALUATION BY		STANDARD
Tax Group: 4	Tax Dist:	
BUILDING MARKET VALUE		246,651
TOTAL MARKET OB/XF VALUE		5,916
TOTAL LAND VALUE - MARKET		55,000
TOTAL MARKET VALUE		307,567
SOH/AGL Deduction		78,818
ASSESSED VALUE		228,749
TOTAL EXEMPTION VALUE	HX HB	50,000
BASE TAXABLE VALUE		178,749
TOTAL JUST VALUE		307,567
NCON VALUE		0
INCOME VALUE		
PREVIOUS YEAR MKT VALUE		258,894

PERMIT NUM	DESCRIPTION	AMT	ISSUED
17006200	CO ISSUED	0	03/13/2018
17006200	NEW CONSTR	256,230	10/01/2017

SALES DATA

OFF RECORD Number	DATE	TYPE INST	Q U	V I	RSN CD	SALE PRICE
2185/1477	3/23/2018	WD	Q	I	01	247,300
GRANTOR: DREAM FINDERS HOMES L						
GRANTEE: DUGGANS MARCUS ERIC						
2134/1867	7/20/2017	WD	Q	V	05	292,000
GRANTOR: BWC LAND PLUMMER LLC						
GRANTEE: DREAM FINDERS HOMES						

BUILDING NOTES

BUILDING DIMENSIONS

BAS=[YR=2018] W17 USP=[YR=2018] W16 S8 FOP=[YR=2018] S6 D2 R2 E14 N8 W16$ E16 N8$ S16 W14 U2 L2 N6 W11 S35 FGR=[YR=2018] W10 S21 E10 S2 E20 N3 PTO=[YR=2018] E9 N8 PTO=[YR=2018] N6 W9 S6 E9$ W9 S8$ N20 W20$ E20 S6 E9 S14 E15 N63$.

EXTRA FEATURES

LN	OB/XF CODE	DESCRIPTION	BLD	CAP	L	W	UNITS	UT	Adj R	ADJ UNIT PRICE	ORIG COND	YEAR ON	YEAR ACTUAL	Q	% COND	OB/XF MKT VALUE	NOTES
1	0811	CONCRETE B	0	100	0	0	1,161.00	SF	5.20	5.20	100	2018	2018	3	98	5,916	

LAND DESCRIPTION

TOTAL OB/XF 5,916

LN	USE CODE	CLS	LAND USE DESCRIPTION	CAP	RD	LOC ZONE	FRONT	DEPTH	TOT LND UTS	UNIT TYPE	DT	DPTH FACT	% COND	TOT ADJ	UNIT PRICE	ADJ UNIT PRICE	LAND VALUE	OTHER ADJUSTMENTS AND NOTES	YEAR	DENSITY	DECL	FRZ	YR	CONSRV
1	000100	C	SFR	100			0.00	0.00	1.00	LT		1.00	1.00	1.00	55,000.00	55,000.00	55,000							

REVIEW DATE 10/22/2018 BY KB Total Acres: 0.00 Total Land Value: 55,000 Market: 0 Agricultural: 0 Common: 55,000 PRINTED 08/02/2023 BY SYS