LOT 37
IN OR 2088/321
PLUMMER CREEK PHASE TWO A

SAEGERT KEVIN & AMY
88567 WAXWING CT
YULEE, FL 32097

2023

12-2N-26-1602-0037-0000

NASSAU COUNTY PROPERTY

BUILDING CHARACTERISTICS

ELEMENT	CD	CONSTRUCTION
Exterior Wall	10	ABOVE AVG 90
Exterior Wall	21	STONE 10
Roof Structur	08	IRREGULAR 100
Roof Cover	03	COMP SHNGL 100
Interior Wall	05	DRYWALL 100
Interior Floo	11	CLAY TILE 60
Interior Floo	14	CARPET 40
Air Condition	03	CENTRAL 100
Heating Type	04	AIR DUCTED 100
Bedrooms		5 100
Bathrooms		3 100
Frame	02	WOOD FRAME 100
Stories	2.	2. 100
Units		0 100
Occupancy	00	NONE 100
Quality	04	Quality Level 04
DOR CODE	0100	SINGLE FAMILY
MAP NUM		MKT AREA 05
NEIGHBORHOOD/LOC	5013.00	

AREA TYPE	TOTAL GROSS AREA	PCT OF BASE	TOT ADJ AREA	SUBAREA MARKET VALUE
BAS	1,417	100	1,417	137,438
FGR	440	55	242	23,472
FOP	114	30	34	3,298
FSP	180	40	72	6,983
FUS	2,078	100	2,078	201,549
PTO	100	5	5	485
STR	33	10	3	291
TOTALS	4,362		3,851	373,516

MARKET ADJUSTMENTS

TYPE	MDL	EFF. AREA	TOT ADJ PTS	EFF. BASE RATE	REPL. COST NEW	AYB	EYB	ECON	FNCT		NORM	% COND
0100	01	3,851	110.2815	99.53	383,290	2016	2016	0	0	0	2.55	97.45

1 SINGLE FAM – 100% - 2017 Heated Area: 3495 HX Base Yr 2017

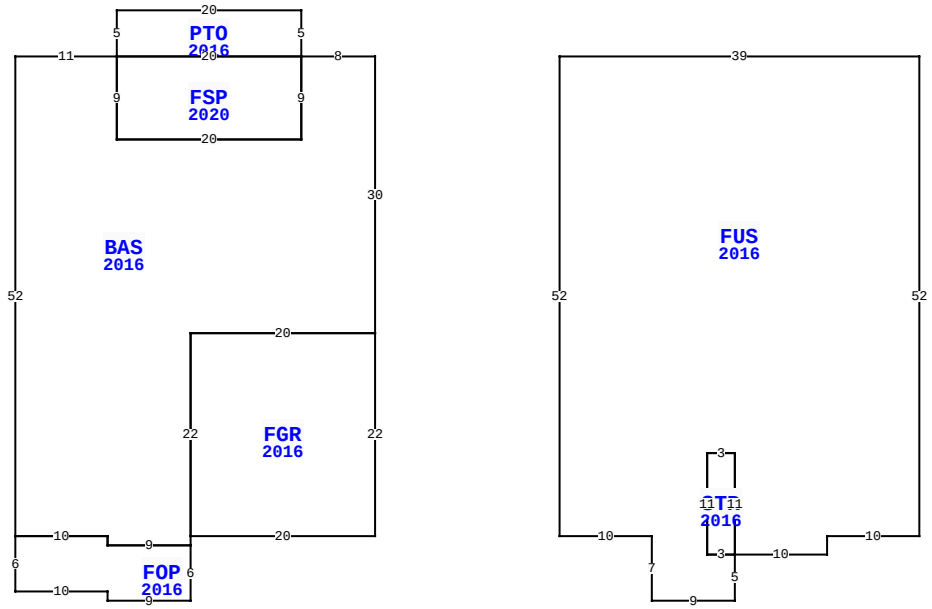

88567 WAXWING CT, YULEE

BLD DATE		LGL DATE	
XF DATE		LAND DATE	
INC DATE		AG DATE	

VALUATION SUMMARY

VALUATION BY		STANDARD
Tax Group: 4	Tax Dist:	
BUILDING MARKET VALUE		373,516
TOTAL MARKET OB/XF VALUE		9,210
TOTAL LAND VALUE - MARKET		55,000
TOTAL MARKET VALUE		437,726
SOH/AGL Deduction		127,570
ASSESSED VALUE		310,156
TOTAL EXEMPTION VALUE	HX HB	50,000
BASE TAXABLE VALUE		260,156
TOTAL JUST VALUE		437,726
NCON VALUE		0
INCOME VALUE		
PREVIOUS YEAR MKT VALUE		366,388

PERMIT NUM	DESCRIPTION	AMT	ISSUED
B1632376	CO ISSUED	0	11/29/2016
B1632376	NEW CONSTR	428,834	05/01/2016

SALES DATA

OFF RECORD Number	DATE	TYPE INST	Q U	V I	RSN CD	SALE PRICE
2088/0321	12/07/2016	WD	Q	I	01	300,000
GRANTOR: DREAM FINDERS HOMES L						
GRANTEE: SAEGERT KEVIN & AMY						
2048/0257	5/19/2016	WD	Q	V	05	490,400
GRANTOR: BWC LAND PLUMMER LLC						
GRANTEE: DREAM FINDERS HOMES						

BUILDING NOTES

BUILDING DIMENSIONS

BAS=[YR=2016] W8 PTO=[YR=2016] N5 W20 S5 FSP=[YR=2020] S9 E20 N9 W20$ E20$S9 W20 N9 W11 S52 FOP=[YR=2016] S6 E10 S1 E9 N6 W9 N1 W10$ E10 S1 E9 N1 FGR=[YR=2016] E20 N22 W20 S22$ N22 E20 N30$ PTR=E20 FUS=[YR=2016] E39 S52 W10 S2 W10 STR=[YR=2016] W3 N11 E3 S11$N11 W3 S11 E3 S5 W9 N7 W10 N52$ W20$.

EXTRA FEATURES

LN	OB/XF CODE	DESCRIPTION	BLD	CAP	L	W	UNITS	UT	Adj R	ADJ UNIT PRICE	ORIG COND	YEAR ON	YEAR ACTUAL	Q	% COND	OB/XF MKT VALUE	NOTES
1	0810	CONCRETE A	0	100	0	0	779.00	SF	6.50	6.50	100	2016	2016	3	97	4,912	
2	0476	VF 6 SBPL	0	100	0	0	132.00	LF	32.00	32.00	100	2018	2018	3	95	4,013	
3	0470	VNYL GATE	0	100	0	0	1.00	UT	300.00	300.00	100	2018	2018	3	95	285	

LAND DESCRIPTION

TOTAL OB/XF 9,210

LN	USE CODE	CLS	LAND USE DESCRIPTION	CAP	RD	LOC ZONE	FRONT	DEPTH	TOT LND UTS	UNIT TYPE	DT	DPTH FACT	% COND	TOT ADJ	UNIT PRICE	ADJ UNIT PRICE	LAND VALUE	OTHER ADJUSTMENTS AND NOTES	YEAR	DENSITY	DECL	FRZ	YR	CONSRV
1	000100	C	SFR	100			0.00	0.00	1.00	LT		1.00	1.00	1.00	55,000.00	55,000.00	55,000							

REVIEW DATE 08/10/2022 BY KBA Total Acres: 0.00 Total Land Value: 55,000 Market: 0 Agricultural: 0 Common: 55,000 PRINTED 08/02/2023 BY SYS