LOT 2
PLUMMER CREEK PHASE TWO A
PBK 8/142

DOWLING EVELENA
79559 PLUMMERS CREEK DR
YULEE, FL 32097

2023

12-2N-26-1602-0002-0000

BUILDING CHARACTERISTICS

ELEMENT	CD	CONSTRUCTION
Exterior Wall	10	ABOVE AVG 100
Roof Structur	03	GABLE/HIP 100
Roof Cover	03	COMP SHNGL 100
Interior Wall	05	DRYWALL 100
Interior Floo	11	CLAY TILE 70
Interior Floo	14	CARPET 30
Air Condition	03	CENTRAL 100
Heating Type	04	AIR DUCTED 100
Bedrooms		3 100
Bathrooms		2 100
Frame	02	WOOD FRAME 100
Stories	1.	1. 100
Units		0 100
Occupancy	00	NONE 100
Quality	04	Quality Level 04
DOR CODE	0100	SINGLE FAMILY
MAP NUM		MKT AREA 05
NEIGHBORHOOD/LOC	5013.00	

AREA TYPE	TOTAL GROSS AREA	PCT OF BASE	TOT ADJ AREA	SUBAREA MARKET VALUE
BAS	2,072	100	2,072	214,468
FGR	712	55	392	40,575
FOP	54	30	16	1,656
FOP	110	30	33	3,415
PTO	72	5	4	414
PTO	128	5	6	621
TOTALS	3,148		2,523	261,149

MARKET ADJUSTMENTS

TYPE	MDL	EFF. AREA	TOT ADJ PTS	EFF. BASE RATE	REPL. COST NEW	AYB	EYB	ECON	FNCT		NORM	% COND
0100	01	2,523	117.0288	105.62	266,479	2017	2017	0	0	0	2.00	98.00

1 SINGLE FAM – 100% - 2022 Heated Area: 2072 HX Base Yr 2022

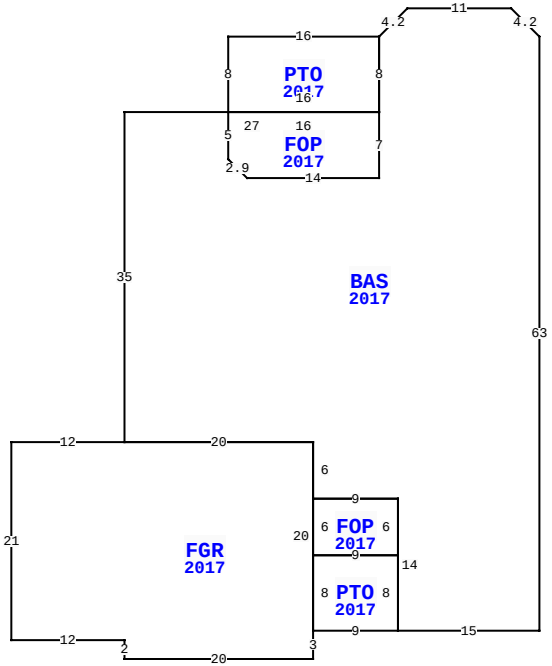

79559 PLUMMERS CREEK DR, YULEE

BLD DATE		LGL DATE	
XF DATE		LAND DATE	
INC DATE		AG DATE	

NASSAU COUNTY PROPERTY

PAGE 1 of 1 4

VALUATION SUMMARY

VALUATION BY		STANDARD
Tax Group: 4	Tax Dist:	
BUILDING MARKET VALUE		261,149
TOTAL MARKET OB/XF VALUE		11,651
TOTAL LAND VALUE - MARKET		55,000
TOTAL MARKET VALUE		327,800
SOH/AGL Deduction		45,691
ASSESSED VALUE		282,109
TOTAL EXEMPTION VALUE	HX HB VX	55,000
BASE TAXABLE VALUE		227,109
TOTAL JUST VALUE		327,800
NCON VALUE		0
INCOME VALUE		
PREVIOUS YEAR MKT VALUE		273,892

PERMIT NUM	DESCRIPTION	AMT	ISSUED
1705715	CO ISSUED	0	06/28/2017
1700344	NEW CONSTR	250,163	02/07/2017

SALES DATA

OFF RECORD Number	DATE	TYPE INST	Q U	V I	RSN CD	SALE PRICE
2611/1446	1/05/2023	WD	Q	I	01	427,000
GRANTOR: FOGLE JEREMY & ASHLY						
GRANTEE: DOWLING EVELENA						
2497/1017	9/16/2021	WD	Q	I	01	381,000
GRANTOR: PARKER TIMOTHY P & AM						
GRANTEE: FOGLE JEREMY & ASHL						

BUILDING NOTES

BUILDING DIMENSIONS

BAS=[YR=2017] U3 L3 W11 D3 L3 PTO=[YR=2017] W16 S8
FOP=[YR=2017] S5 D2 R2 E14 N7 W16$ E16 N8$ S8 W27 S35
FGR=[YR=2017] W12 S21 E12 S2 E20 N3 PTO=[YR=2017] E9 N8
FOP=[YR=2017] N6 W9 S6 E9$ W9 S8$ N20 W20$ E20 S6 E9 S14 E15
N63$.

EXTRA FEATURES

LN	OB/XF CODE	DESCRIPTION	BLD	CAP	L	W	UNITS	UT	Adj R	ADJ UNIT PRICE	ORIG COND	YEAR ON	YEAR ACTUAL	Q	% COND	OB/XF MKT VALUE	NOTES
1	0811	CONCRETE B	0	100	0	0	1,228.00	SF	5.20	5.20	100	2017	2017	3	97	6,194	
2	0476	VF 6 SBPL	0	100	0	0	174.00	LF	32.00	32.00	100	2020	2020	3	98	5,457	

LAND DESCRIPTION

TOTAL OB/XF 11,651

LN	USE CODE	CLS	LAND USE DESCRIPTION	CAP	RD	LOC ZONE	FRONT	DEPTH	TOT LND UTS	UNIT TYPE	DT	DPTH FACT	% COND	TOT ADJ	UNIT PRICE	ADJ UNIT PRICE	LAND VALUE	OTHER ADJUSTMENTS AND NOTES	YEAR	DENSITY	DECL	FRZ	YR	CONSRV
1	000100	C	SFR	100			0.00	0.00	1.00	LT		1.00	1.00	1.00	55,000.00	55,000.00	55,000							

REVIEW DATE 06/25/2021 BY KBA Total Acres: 0.00 Total Land Value: 55,000 Market: 0 Agricultural: 0 Common: 55,000 PRINTED 08/02/2023 BY SYS