LOT 174
IN OR 1994/999
PLUMMER CREEK #1 PB 8/28

MOORE DOUGLAS F JR
83304 PURPLE MARTIN DR
YULEE, FL 32097

2023

12-2N-26-1601-0174-0000

BUILDING CHARACTERISTICS

ELEMENT	CD	CONSTRUCTION
Exterior Wall	10	ABOVE AVG 100
Roof Structur	03	GABLE/HIP 100
Roof Cover	03	COMP SHNGL 100
Interior Wall	05	DRYWALL 100
Interior Floo	11	CLAY TILE 80
Interior Floo	14	CARPET 20
Air Condition	03	CENTRAL 100
Heating Type	04	AIR DUCTED 100
Bedrooms		4 100
Bathrooms		3 100
Frame	02	WOOD FRAME 100
Stories	2.	2. 100
Units		0 100
Occupancy	00	NONE 100
Quality	04	Quality Level 04

DOR CODE 0100 SINGLE FAMILY
MAP NUM | MKT AREA 05
NEIGHBORHOOD/LOC 5013.00

AREA TYPE	TOTAL GROSS AREA	PCT OF BASE	TOT ADJ AREA	SUBAREA MARKET VALUE
BAS	1,704	100	1,704	186,346
FGR	460	55	253	27,667
FOP	42	30	13	1,422
FOP	230	30	69	7,546
FUS	392	100	392	42,868
PTO	56	5	3	328
TOTALS	2,884		2,434	266,177

MARKET ADJUSTMENTS

TYPE	MDL	EFF. AREA	TOT ADJ PTS	EFF. BASE RATE	REPL. COST NEW	AYB	EYB	ECON	FNCT		NORM	% COND
0100	01	2,434	124.9206	112.74	274,409	2015	2015	0	0	0	3.00	97.00

1 SINGLE FAM – 100% - 2016 Heated Area: 2096 HX Base Yr 2016

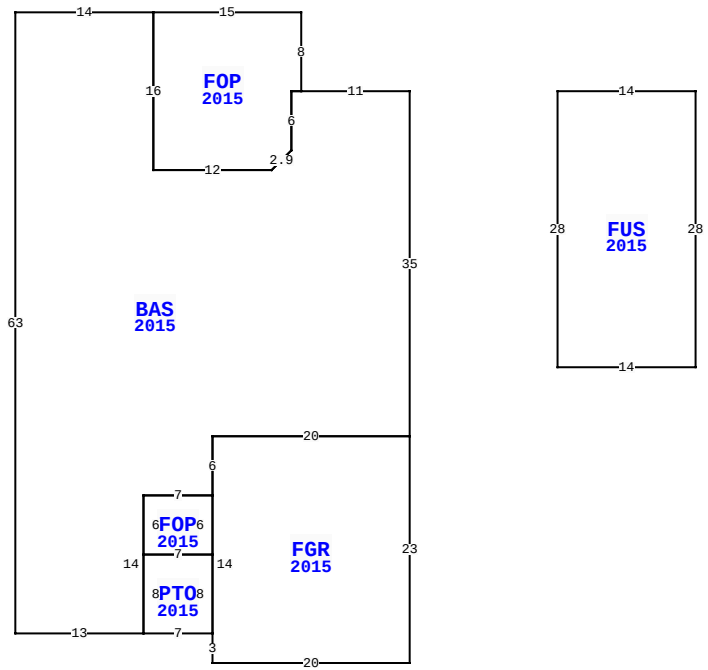

83304 PURPLE MARTIN DR, YULEE

BLD DATE		LGL DATE	
XF DATE		LAND DATE	
INC DATE		AG DATE	

NASSAU COUNTY PROPERTY

PAGE 1 of 1 4

VALUATION SUMMARY

VALUATION BY		STANDARD
Tax Group: 4	Tax Dist:	
BUILDING MARKET VALUE		266,177
TOTAL MARKET OB/XF VALUE		4,437
TOTAL LAND VALUE - MARKET		55,000
TOTAL MARKET VALUE		325,614
SOH/AGL Deduction		107,918
ASSESSED VALUE		217,696
TOTAL EXEMPTION VALUE	HX HB	50,000
BASE TAXABLE VALUE		167,696
TOTAL JUST VALUE		325,614
NCON VALUE		0
INCOME VALUE		
PREVIOUS YEAR MKT VALUE		274,238

PERMIT NUM	DESCRIPTION	AMT	ISSUED
B1530328	CO ISSUED	0	07/13/2015
B1530328	NEW CONSTR	262,572	04/01/2015

SALES DATA

OFF RECORD Number	DATE	TYPE INST	Q U	V I	RSN CD	SALE PRICE
1994/0999	7/28/2015	WD	Q	I	01	213,800
GRANTOR: DREAM FINDERS HOMES L						
GRANTEE: MOORE DOUGLAS F JR						
1938/1437	9/09/2014	SW	Q	V	05	100,300
GRANTOR: BWC LAND PLUMMER LLC						
GRANTEE: DREAM FINDERS HOMES						

BUILDING NOTES

BUILDING DIMENSIONS

BAS=[YR=2015] W11 FOP=[YR=2015] N8 W15 S16 E12 U2 R2 N6 E1$ W1 S6 D2 L2 W12 N16 W14 S63 E13 PTO=[YR=2015] E7 FGR=[YR=2015] S3 E20 N23 W20 S6 FOP=[YR=2015] W7 S6 E7 N6$ S14$ N8 W7 S8$ N14 E7 N6 E20 N35$ PTR= E15 FUS=[YR=2015] E14 S28 W14 N28$ W15$.

EXTRA FEATURES

LN	OB/XF CODE	DESCRIPTION	BLD	CAP	L	W	UNITS	UT	Adj R	ADJ UNIT PRICE	ORIG COND	YEAR ON	YEAR ACTUAL	Q	% COND	OB/XF MKT VALUE	NOTES
1	0810	CONCRETE A	0	100	0	0	711.00	SF	6.50	6.50	100	2015	2015	3	96	4,437	

LAND DESCRIPTION

TOTAL OB/XF 4,437

LN	USE CODE	CLS	LAND USE DESCRIPTION	CAP	RD	LOC ZONE	FRONT	DEPTH	TOT LND UTS	UNIT TYPE	DT	DPTH FACT	% COND	TOT ADJ	UNIT PRICE	ADJ UNIT PRICE	LAND VALUE	OTHER ADJUSTMENTS AND NOTES	YEAR	DENSITY	DECL	FRZ	YR	CONSRV
1	000100	C	SFR	100		PUD	0.00	0.00	1.00	LT		1.00	1.00	1.00	55,000.00	55,000.00	55,000							

REVIEW DATE 08/06/2020 BY KBA Total Acres: 0.00 Total Land Value: 55,000 Market: 0 Agricultural: 0 Common: 55,000 PRINTED 08/02/2023 BY SYS