LOT 156
PLUMMER CREEK #1 PB 8/28

MORALES AURA R RIVERA/COLLAZO-MORALES RAFAEL A
83134 PURPLE MARTIN DRIVE
YULEE, FL 32097

2023

12-2N-26-1601-0156-0000

NASSAU COUNTY PROPERTY

BUILDING CHARACTERISTICS

ELEMENT	CD	CONSTRUCTION
Exterior Wall	16	WD FR STUC 100
Roof Structur	08	IRREGULAR 100
Roof Cover	03	COMP SHNGL 100
Interior Wall	05	DRYWALL 100
Interior Floo	11	CLAY TILE 50
Interior Floo	14	CARPET 50
Air Condition	03	CENTRAL 100
Heating Type	04	AIR DUCTED 100
Bedrooms		4 100
Bathrooms		3 100
Frame	02	WOOD FRAME 100
Stories	2.	2. 100
Units		0 100
Occupancy	00	NONE 100
Quality	04	Quality Level 04

DOR CODE	0100	SINGLE FAMILY	
MAP NUM		MKT AREA	05
NEIGHBORHOOD/LOC	5013.00		

AREA TYPE	TOTAL GROSS AREA	PCT OF BASE	TOT ADJ AREA	SUBAREA MARKET VALUE
BAS	1,731	100	1,731	181,004
FGR	460	55	253	26,455
FOP	49	30	15	1,568
FOP	110	30	33	3,450
FUS	390	100	390	40,781
PTO	42	5	2	210
STR	30	10	3	313
USP	126	30	38	3,973
TOTALS	2,938		2,465	257,755

MARKET ADJUSTMENTS

TYPE	MDL	EFF. AREA	TOT ADJ PTS	EFF. BASE RATE	REPL. COST NEW	AYB	EYB	ECON	FNCT		NORM	% COND
0100	01	2,465	119.4480	107.80	265,727	2016	2016	0	0	0	3.00	97.00

1 SINGLE FAM – 100% - 2021 Heated Area: 2121 HX Base Yr 2021

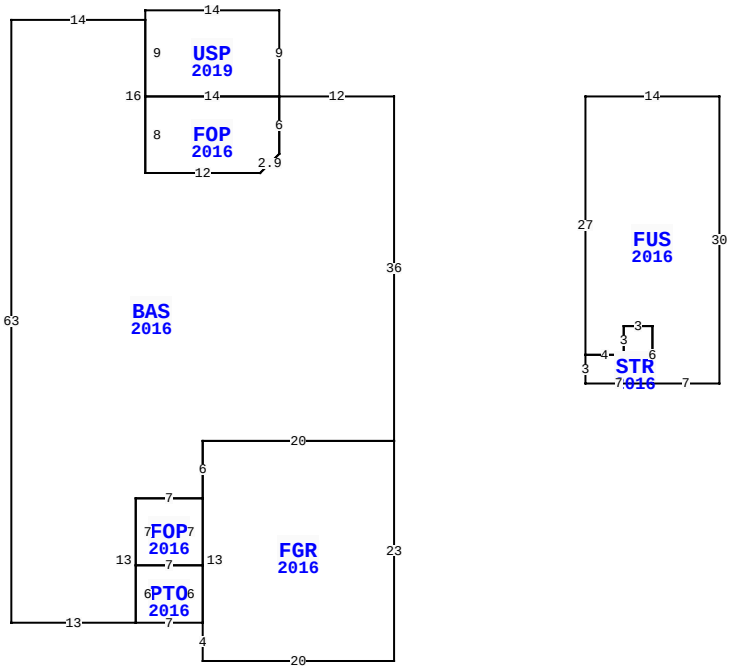

83134 PURPLE MARTIN DR, YULEE

BLD DATE		LGL DATE	
XF DATE		LAND DATE	
INC DATE		AG DATE	

VALUATION SUMMARY

VALUATION BY		STANDARD
Tax Group: 4	Tax Dist:	
BUILDING MARKET VALUE		257,755
TOTAL MARKET OB/XF VALUE		7,976
TOTAL LAND VALUE - MARKET		55,000
TOTAL MARKET VALUE		320,731
SOH/AGL Deduction		50,370
ASSESSED VALUE		270,361
TOTAL EXEMPTION VALUE	HX HB	50,000
BASE TAXABLE VALUE		220,361
TOTAL JUST VALUE		320,731
NCON VALUE		1,705
INCOME VALUE		
PREVIOUS YEAR MKT VALUE		269,194

PERMIT NUM	DESCRIPTION	AMT	ISSUED
19005471	ADDITION	14,500	07/01/2019
B1531292	CO ISSUED	0	03/28/2016
B1531292	NEW CONSTR	261,618	10/01/2015

SALES DATA

OFF RECORD Number	DATE	TYPE INST	Q U	V I	RSN CD	SALE PRICE
2411/1716	11/24/2020	WD	Q	I	02	300,000
GRANTOR: MILLER ROBERT S & PEG						
GRANTEE: MORALES AURA R RIVE						
2266/1148	4/05/2019	WD	Q	I	01	255,000
GRANTOR: MCCLURE CHRISTIAN J &						
GRANTEE: MILLER ROBERT S & P						

BUILDING NOTES

BUILDING DIMENSIONS

BAS=[YR=2016] W12 USP=[YR=2019] N9 W14 S9 FOP=[YR=2016] S8 E12 U2 R2 N6 W14$ E14$ S6 D2 L2 W12 N16W14 S63 E13 PTO=[YR=2016] E7 FGR=[YR=2016] S4 E20 N23 W20 S6 FOP=[YR=2016] W7 S7 E7 N7 $ S13$ N6 W7 S6$ N13 E7 N6 E20 N36$ PTR=E20 FUS=[YR=2016] E14 S30 W7 STR=[YR=2016] W7 N3 E4 N3 E3 S6$ N6 W3 S3 W4 N27$ W20$.

EXTRA FEATURES

LN	OB/XF CODE	DESCRIPTION	BLD	CAP	L	W	UNITS	UT	Adj R	ADJ UNIT PRICE	ORIG COND	YEAR ON	YEAR ACTUAL	Q	% COND	OB/XF MKT VALUE	NOTES
1	0810	CONCRETE A	0	100	0	0	721.00	SF	6.50	6.50	100	2016	2016	3	97	4,546	
2	0500	FP-PRE FAB	0	100	0	0	1.00	UT	3,500.00	3,500.00	100	2016	2016	3	98	3,430	

LAND DESCRIPTION

TOTAL OB/XF 7,976

LN	USE CODE	CLS	LAND USE DESCRIPTION	CAP	RD	LOC ZONE	FRONT	DEPTH	TOT LND UTS	UNIT TYPE	DT	DPTH FACT	% COND	TOT ADJ	UNIT PRICE	ADJ UNIT PRICE	LAND VALUE	OTHER ADJUSTMENTS AND NOTES	YEAR	DENSITY	DECL	FRZ	YR	CONSRV
1	000100	C	SFR	100		PUD	0.00	0.00	1.00	LT		1.00	1.00	1.00	55,000.00	55,000.00	55,000							

REVIEW DATE 08/10/2022 BY KBA Total Acres: 0.00 Total Land Value: 55,000 Market: 0 Agricultural: 0 Common: 55,000 PRINTED 08/02/2023 BY SYS