LOT 54
IN OR 2102/391
PLUMMER CREEK #1 PB 8/28

**AARONSON PATRICK MICHAEL**
79686 PLUMMERS CREEK DR
YULEE, FL 32097

**2023**

**12-2N-26-1601-0054-0000**

## NASSAU COUNTY PROPERTY



## BUILDING CHARACTERISTICS

| ELEMENT | CD | CONSTRUCTION |
|---|---|---|
| Exterior Wall | 10 | ABOVE AVG 100 |
| Roof Structur | 08 | IRREGULAR 100 |
| Roof Cover | 03 | COMP SHNGL 100 |
| Interior Wall | 05 | DRYWALL 100 |
| Interior Floo | 11 | CLAY TILE 50 |
| Interior Floo | 14 | CARPET 50 |
| Air Condition | 03 | CENTRAL 100 |
| Heating Type | 04 | AIR DUCTED 100 |
| Bedrooms | | 3 100 |
| Bathrooms | | 2 100 |
| Frame | 02 | WOOD FRAME 100 |
| Stories | 1. | 1. 100 |
| Units | | 0 100 |
| Occupancy | 00 | NONE 100 |
| Quality | 04 | Quality Level 04 |

DOR CODE 0100 SINGLE FAMILY
MAP NUM | MKT AREA 05
NEIGHBORHOOD/LOC 5013.00

| AREA TYPE | TOTAL GROSS AREA | PCT OF BASE | TOT ADJ AREA | SUBAREA MARKET VALUE |
|---|---|---|---|---|
| BAS | 1,937 | 100 | 1,937 | 202,229 |
| FGR | 714 | 55 | 393 | 41,031 |
| FOP | 48 | 30 | 14 | 1,462 |
| FSP | 224 | 40 | 90 | 9,396 |
| TOTALS | 2,923 | | 2,434 | 254,117 |

## MARKET ADJUSTMENTS

| TYPE | MDL | EFF. AREA | TOT ADJ PTS | EFF. BASE RATE | REPL. COST NEW | AYB | EYB | ECON | FNCT | | NORM | % COND |
|---|---|---|---|---|---|---|---|---|---|---|---|---|
| 0100 | 01 | 2,434 | 119.8785 | 108.19 | 263,334 | 2014 | 2014 | 0 | 0 | 0 | 3.50 | 96.50 |

1 SINGLE FAM - 100% - 2018 Heated Area: 1937 HX Base Yr 2018

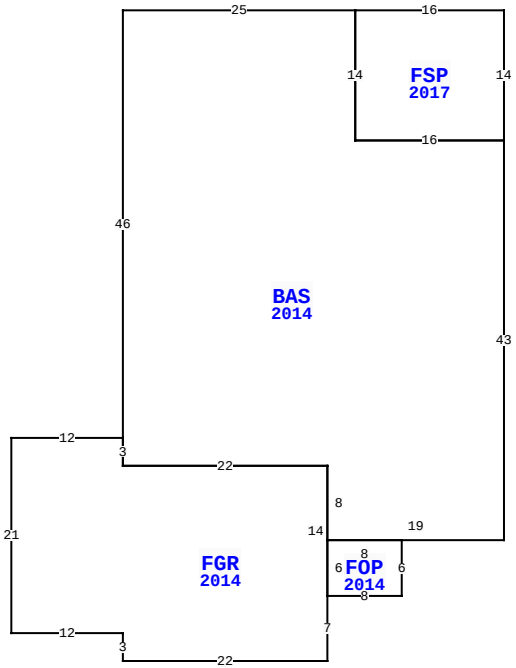


79686 PLUMMERS CREEK DR, YULEE

| | | | |
|---|---|---|---|
| BLD DATE | | LGL DATE | |
| XF DATE | | LAND DATE | |
| INC DATE | | AG DATE | |

## VALUATION SUMMARY

| | | |
|---|---|---|
| VALUATION BY | | STANDARD |
| Tax Group: 4 | Tax Dist: | |
| BUILDING MARKET VALUE | | 254,117 |
| TOTAL MARKET OB/XF VALUE | | 8,214 |
| TOTAL LAND VALUE - MARKET | | 55,000 |
| TOTAL MARKET VALUE | | 317,331 |
| SOH/AGL Deduction | | 101,258 |
| ASSESSED VALUE | | 216,073 |
| TOTAL EXEMPTION VALUE | HX HB | 50,000 |
| BASE TAXABLE VALUE | | 166,073 |
| TOTAL JUST VALUE | | 317,331 |
| NCON VALUE | | 0 |
| INCOME VALUE | | |
| PREVIOUS YEAR MKT VALUE | | 266,315 |

| PERMIT NUM | DESCRIPTION | AMT | ISSUED |
|---|---|---|---|
| 1703138 | ADDITION | 6,500 | 06/01/2017 |
| B1428283 | CO ISSUED | 0 | 06/03/2014 |
| B1428283 | NEW CONSTR | 0 | 06/01/2014 |

## SALES DATA

| OFF RECORD Number | DATE | TYPE INST | Q U | V I | RSN CD | SALE PRICE |
|---|---|---|---|---|---|---|
| 2102/0391 | 1/17/2017 | WD | Q | I | 01 | 235,000 |
| GRANTOR: GENINS ROBERT & SUZAN | | | | | | |
| GRANTEE: AARONSON PATRICK MI | | | | | | |
| 1924/1579 | 6/09/2014 | WD | Q | I | 02 | 201,900 |
| GRANTOR: DREAM FINDERS HOMES L | | | | | | |
| GRANTEE: GENINS ROBERT & SUZ | | | | | | |

## BUILDING NOTES

## BUILDING DIMENSIONS

FSP=[YR=2017] W16 BAS=[YR=2014] W25 S46 FGR=[YR=2014] W12 S21 E12 S3 E22 N7 FOP=[YR=2014] E8 N6 W8 S6$ N14 W22 N3$ S3 E22 S8 E19 N43 W16 N14$ S14 E16 N14$.

## EXTRA FEATURES

| LN | OB/XF CODE | DESCRIPTION | BLD | CAP | L | W | UNITS | UT | Adj R | ADJ UNIT PRICE | ORIG COND | YEAR ON | YEAR ACTUAL | Q | % COND | OB/XF MKT VALUE | NOTES |
|---|---|---|---|---|---|---|---|---|---|---|---|---|---|---|---|---|---|
| 1 | 0811 | CONCRETE B | 0 | 100 | 0 | 0 | 1,144.00 | SF | 5.20 | 5.20 | 100 | 2014 | 2014 | 3 | 95 | 5,651 | |
| 2 | 0476 | VF 6 SBPL | 0 | 100 | 0 | 0 | 90.00 | LF | 32.00 | 32.00 | 100 | 2014 | 2014 | 3 | 89 | 2,563 | |

## LAND DESCRIPTION

TOTAL OB/XF 8,214

| LN | USE CODE | CLS | LAND USE DESCRIPTION | CAP | RD | LOC ZONE | FRONT | DEPTH | TOT LND UTS | UNIT TYPE | DT | DPTH FACT | % COND | TOT ADJ | UNIT PRICE | ADJ UNIT PRICE | LAND VALUE | OTHER ADJUSTMENTS AND NOTES | YEAR | DENSITY | DECL | FRZ | YR | CONSRV |
|---|---|---|---|---|---|---|---|---|---|---|---|---|---|---|---|---|---|---|---|---|---|---|---|---|
| 1 | 000100 | C | SFR | 100 | | PUD | 0.00 | 0.00 | 1.00 | LT | | 1.00 | 1.00 | 1.00 | 55,000.00 | 55,000.00 | 55,000 | | | | | | | |

REVIEW DATE 08/10/2022 BY KBA Total Acres: 0.00 Total Land Value: 55,000 Market: 0 Agricultural: 0 Common: 55,000 PRINTED 08/02/2023 BY SYS