PT OF GOVT LOTS 3,4 OF
SEC 6-2N-28E & PT J PELOT
GRANT SEC 11-2N-28E IN

CITY OF FERNANDINA BEACH/
C/O AMELIA RIVER HOLDINGS LLC, ATT:TOM MILLER
FERNANDINA BEACH, FL 32034

2023

11-2N-28-0000-0005-00L1

NASSAU COUNTY PROPERTY

BUILDING CHARACTERISTICS

ELEMENT	CD	CONSTRUCTION
Exterior Wall	25	MOD METAL 100
Roof Structur	10	STEEL FRME 100
Roof Cover	12	MODULAR MT 100
Interior Wall	01	MINIMUM 100
Interior Floo	03	CONC FINSH 100
Ceiling	04	NONE 100
Air Condition	01	NONE 100
Heating Type	01	NONE 100
Plumbing		8 100
Frame	05	STEEL 100
Story Height		14 100
RMS		3 100
Stories	1.	1. 100
Class	00	. 100
Units		0 100
Occupancy	00	NONE 100
Quality	03	Quality Level 03
DOR CODE	3800	GOLF COURSES
MAP NUM		MKT AREA 01
NEIGHBORHOOD/LOC	1010.00	

AREA TYPE	TOTAL GROSS AREA	PCT OF BASE	TOT ADJ AREA	SUBAREA MARKET VALUE
AOF	192	185	355	7,540
AOF	408	185	755	16,036
BAS	296	100	296	6,287
BAS	5,104	100	5,104	108,409
CAN	2,400	30	720	15,293
TOTALS	8,400		7,230	153,565

MARKET ADJUSTMENTS

TYPE	MDL	EFF. AREA	TOT ADJ PTS	EFF. BASE RATE	REPL. COST NEW	AYB	EYB	ECON	FNCT		NORM	% COND
4807	06	7,230	89.4400	42.48	307,130	2001	2001	0	0	0	50.00	50.00

1 PREFAB MTL – 0% - 0 Heated Area: 6000 HX Base Yr

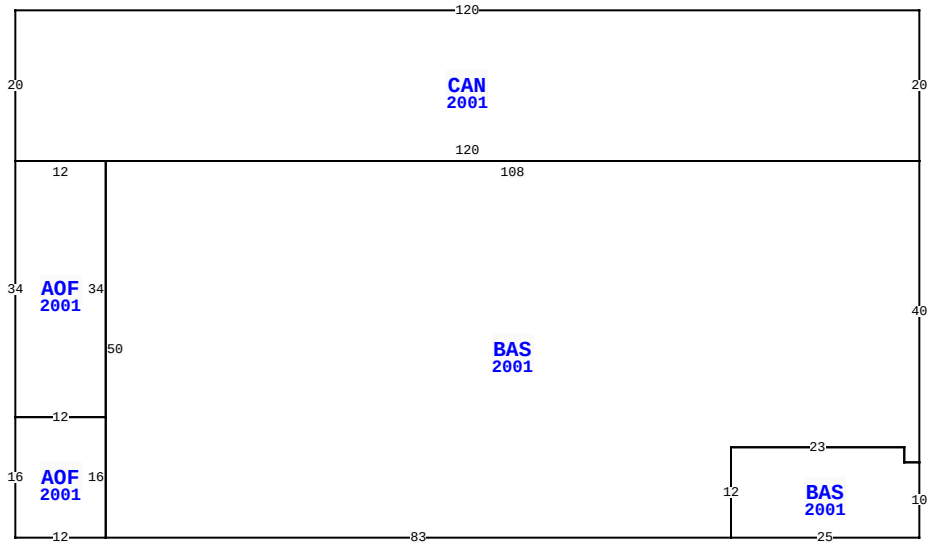

4477 BUCCANEER TRL, FERNANDINA BEACH

BLD DATE	10/31/2022	HS	LGL DATE		
XF DATE	10/31/2022	HS	LAND DATE	08/11/2020	KK
INC DATE			AG DATE		

VALUATION SUMMARY

VALUATION BY	STANDARD
Tax Group: 2	Tax Dist:
BUILDING MARKET VALUE	1,162,217
TOTAL MARKET OB/XF VALUE	1,061,841
TOTAL LAND VALUE - MARKET	419,048
TOTAL MARKET VALUE	2,643,106
SOH/AGL Deduction	893,542
ASSESSED VALUE	1,749,564
TOTAL EXEMPTION VALUE	0
BASE TAXABLE VALUE	1,749,564
TOTAL JUST VALUE	2,643,106
NCON VALUE	0
INCOME VALUE	
PREVIOUS YEAR MKT VALUE	1,590,513

PERMIT NUM	DESCRIPTION	AMT	ISSUED
20210231	NEW CONSTR-PRO SH	640,192	02/04/2022
20130703	NEW CONSTR	25,000	04/04/2013
20130043	CHNGE SRVC	300	01/08/2013
20120842	ADD BAR IN CLUBHS	3,000	05/14/2012
20112045	ELEC OTHER	500	11/15/2011
20111983	ELEC OTHER	250	11/04/2011

SALES DATA

OFF RECORD Number	DATE	TYPE INST	Q U	V I	RSN CD	SALE PRICE
1751/0435	7/29/2011	QC	U	I	11	100
GRANTOR: THE NATIONAL BANK OF						
GRANTEE: THE SUMMERTON INN I						
1704/0456	10/12/2010	CT	U	I	18	100
GRANTOR: CLERK OF COURT						
GRANTEE: THE NATIONAL BANK O						

BUILDING NOTES

BUILDING DIMENSIONS

CAN=[YR=2001] W120 S20 AOF=[YR=2001] S34 AOF=[YR=2001] S16 E12 BAS=[YR=2001] E83 BAS=[YR=2001] E25 N10 W2 N2 W23 S12 $ N12 E23 S2 E2 N40 W108 S50 $ N16 W12 $ E12 N34 W12 $ E120 N20 $.

EXTRA FEATURES

LN	OB/XF CODE	DESCRIPTION	BLD	CAP	L	W	UNITS	UT	Adj R	ADJ UNIT PRICE	ORIG COND	YEAR ON	YEAR ACTUAL	Q	% COND	OB/XF MKT VALUE	NOTES
1	2502	GOLF CRS 2	0	0	0	0	18.00	UT	29,000.00	29,000.00	100	2000	2000	3	80	417,600	
2	0803	ASPHALT C	0	0	0	0	21,708.00	SF	2.00	2.00	30	2001	2001	3	20	8,683	
4	0810	CONCRETE A	0	0	20	20	400.00	SF	6.50	6.50	30	2001	2001	3	52	1,352	
5	0812	CONCRETE C	0	0	0	0	1,499.00	SF	4.00	4.00	100	2001	2001	3	82	4,917	
6	1123	CB 8"	0	0	0	0	1,272.00	SF	6.15	6.15	100	2001	2001	3	82	6,415	
7	0803	ASPHALT C	0	0	0	0	129,156.00	SF	2.00	2.00	30	2001	2001	3	20	51,662	
8	0812	CONCRETE C	0	0	0	0	211,712.00	SF	2.00	2.00	45	2001	2001	3	37	156,667	
9	0812	CONCRETE C	0	0	0	0	4,895.00	SF	4.00	4.00	100	2001	2001	3	82	16,056	
10	0400	CONC CURB	0	0	0	0	4,167.00	LF	15.00	15.00	100	2001	2001	3	86	53,754	
11	0812	CONCRETE C	0	0	0	0	1,753.00	SF	4.00	4.00	100	2001	2001	3	82	5,750	

TOTAL OB/XF 722,856

LAND DESCRIPTION

LN	USE CODE	CLS	LAND USE DESCRIPTION	CAP	RD	LOC ZONE	FRONT	DEPTH	TOT LND UTS	UNIT TYPE	DT	DPTH FACT	% COND	TOT ADJ	UNIT PRICE	ADJ UNIT PRICE	LAND VALUE	OTHER ADJUSTMENTS AND NOTES	YEAR	DENSITY	DECL	FRZ	YR	CONSRV
1	003800	C	GOLF CRS	0	0006	ILW	0.00	0.00	248.30	AC		1.00	1.00	0.10	15,000.00	1,500.00	372,450							
2	000000	C	VAC RES	0	0006		0.00	0.00	62.13	AC		1.00	1.00	0.05	15,000.00	750.00	46,598							

REVIEW DATE 10/31/2022 BY HS Total Acres: 310.43 Total Land Value: 419,048 Market: 0 Agricultural: 0 Common: 419,048 PRINTED 08/02/2023 BY SYS

PT OF GOVT LOTS 3,4 OF
SEC 6-2N-28E & PT J PELOT
GRANT SEC 11-2N-28E IN

CITY OF FERNANDINA BEACH/
C/O AMELIA RIVER HOLDINGS LLC, ATT:TOM MILLER
FERNANDINA BEACH, FL 32034

2023

11-2N-28-0000-0005-00L1

BUILDING CHARACTERISTICS

ELEMENT	CD	CONSTRUCTION
Exterior Wall	14	WD SHINGLE 100
Roof Structur	04	WOOD TRUSS 100
Roof Cover	03	COMP SHNGL 100
Interior Wall	05	DRYWALL 50
Interior Wall	08	DECORATIVE 50
Interior Floo	11	CLAY TILE 50
Interior Floo	14	CARPET 50
Ceiling	02	F.NOT SUS 100
Air Condition	03	CENTRAL 100
Heating Type	04	AIR DUCTED 100
Fixtures		32 100
Frame	02	WOOD FRAME 100
Story Height		10 100
RMS		6 100
Stories	1.	1. 100
Units		0 100
Occupancy	00	NONE 100
Quality	03	Quality Level 03
DOR CODE	3800	GOLF COURSES
MAP NUM		MKT AREA 01
NEIGHBORHOOD/LOC	1010.00	

AREA TYPE	TOTAL GROSS AREA	PCT OF BASE	TOT ADJ AREA	SUBAREA MARKET VALUE
BAS	3,653	100	3,653	258,851
CAN	45	30	14	992
CAN	136	30	41	2,905
CAN	666	30	200	14,172
FDC	81	40	32	2,267
FST	144	50	72	5,102
TOTALS	4,725		4,012	284,290

MARKET ADJUSTMENTS

TYPE	MDL	EFF. AREA	TOT ADJ PTS	EFF. BASE RATE	REPL. COST NEW	AYB	EYB	ECON	FNCT	AP	NORM	% COND
0303	04	4,012	105.6780	118.10	473,817	2007	2007	0	03	2.5	7.50	60.00

4 CLUB HOUSE – 0% - 0 Heated Area: 3653 HX Base Yr

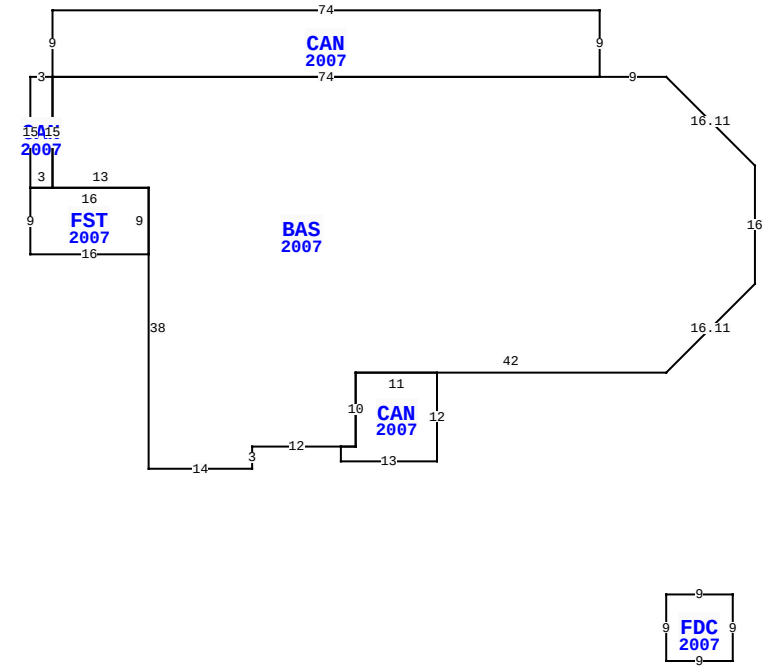

4477 BUCCANEER TRL, FERNANDINA BEACH

BLD DATE	10/31/2022	HS	LGL DATE	
XF DATE	10/31/2022	HS	LAND DATE	08/11/2020 KK
INC DATE			AG DATE	

NASSAU COUNTY PROPERTY

PAGE 2 of 6 2

VALUATION SUMMARY

VALUATION BY	STANDARD
Tax Group: 2	Tax Dist:
BUILDING MARKET VALUE	1,162,217
TOTAL MARKET OB/XF VALUE	1,061,841
TOTAL LAND VALUE - MARKET	419,048
TOTAL MARKET VALUE	2,643,106
SOH/AGL Deduction	893,542
ASSESSED VALUE	1,749,564
TOTAL EXEMPTION VALUE	0
BASE TAXABLE VALUE	1,749,564
TOTAL JUST VALUE	2,643,106
NCON VALUE	0
INCOME VALUE	
PREVIOUS YEAR MKT VALUE	1,590,513

PERMIT NUM	DESCRIPTION	AMT	ISSUED
20111980	ELEC OTHER	9,000	11/03/2011
20111469	ELEC OTHER	200	08/26/2011
20111397	REMODEL	3,000	08/16/2011
20080873	OTHER	0	05/22/2008
20080714	ADDITION	20,000	04/29/2008
20071931	REMODEL	200	10/12/2007

SALES DATA

OFF RECORD Number	DATE	TYPE INST	Q / U	V / I	RSN CD	SALE PRICE
1751/0435	7/29/2011	QC	U	I	11	100
GRANTOR: THE NATIONAL BANK OF						
GRANTEE: THE SUMMERTON INN I						
1704/0456	10/12/2010	CT	U	I	18	100
GRANTOR: CLERK OF COURT						
GRANTEE: THE NATIONAL BANK O						

BUILDING NOTES

BUILDING DIMENSIONS

BAS=[YR=2007] W9 CAN=[YR=2007] N9 W74 S9 E74$ W74 CAN=[YR=2007] W3 S15 FST=[YR=2007] S9 E16 N9 W16$ E3 N15 $ S15 E13 S38 E14 N3 E12 CAN=[YR=2007] S2 E13 N12 W11 S10 W2 $ E2 N10 E42 U12 R12 N16 U12 L12 $ PTR=S70 FDC=[YR=2007] E9 S9 W9 N9$ N70$.

EXTRA FEATURES

LN	OB/XF CODE	DESCRIPTION	BLD	CAP	L	W	UNITS	UT	Adj R	ADJ UNIT PRICE	ORIG COND	YEAR ON	YEAR ACTUAL	Q	% COND	OB/XF MKT VALUE	NOTES
12	1242	WD DECK A	0	0	0	0	649.00	SF	10.00	10.00	100	2001	2001	3	20	1,298	
14	0920	CWALL-WD/M	0	0	0	0	120.00	LF	390.00	390.00	100	2001	2001	3	20	9,360	
16	0416	DUNEWALKS	0	0	92	31	2,852.00	SF	30.00	30.00	100	2001	2001	3	20	17,112	
17	0416	DUNEWALKS	0	0	102	10	1,020.00	SF	30.00	30.00	100	2001	2001	3	20	6,120	
18	0416	DUNEWALKS	0	0	62	8	496.00	SF	30.00	30.00	100	2001	2001	3	20	2,976	
19	0416	DUNEWALKS	0	0	91	10	910.00	SF	30.00	30.00	100	2001	2001	3	20	5,460	
20	0400	CONC CURB	0	0	0	0	5,684.00	LF	7.50	7.50	100	2001	2001	3	86	36,662	
21	0920	CWALL-WD/M	0	0	0	0	870.00	LF	390.00	390.00	100	2001	2001	3	20	67,860	
22	0510	GARAGE WD-	0	0	24	14	336.00	SF	35.00	35.00	100	2001	2001	3	30	3,528	
23	0810	CONCRETE A	0	0	8	9	72.00	SF	6.50	6.50	100	2001	2001	3	82	384	

TOTAL OB/XF 150,760

LAND DESCRIPTION

LN	USE CODE	CLS	LAND USE DESCRIPTION	CAP	RD	LOC ZONE	FRONT	DEPTH	TOT LND UTS	UNIT TYPE	DT	DPTH FACT	% COND	TOT ADJ	UNIT PRICE	ADJ UNIT PRICE	LAND VALUE	OTHER ADJUSTMENTS AND NOTES	YEAR	DENSITY	DECL	FRZ	YR	CONSRV

REVIEW DATE 10/31/2022 BY HS Total Acres: 310.43 Total Land Value: 419,048 Market: 0 Agricultural: 0 Common: 419,048 PRINTED 08/02/2023 BY SYS

PT OF GOVT LOTS 3,4 OF
SEC 6-2N-28E & PT J PELOT
GRANT SEC 11-2N-28E IN

CITY OF FERNANDINA BEACH/
C/O AMELIA RIVER HOLDINGS LLC, ATT:TOM MILLER
FERNANDINA BEACH, FL 32034

2023

11-2N-28-0000-0005-00L1

NASSAU COUNTY PROPERTY

BUILDING CHARACTERISTICS

ELEMENT	CD	CONSTRUCTION
Exterior Wall	25	MOD METAL 100
Roof Structur	10	STEEL FRME 100
Roof Cover	12	MODULAR MT 100
Interior Wall	07	NONE 100
Interior Floo	03	CONC FINSH 100
Ceiling	04	NONE 100
Air Condition	01	NONE 100
Heating Type	01	NONE 100
Plumbing		5 100
Frame	05	STEEL 100
Story Height		10 100
RMS		5 100
Stories	1.	1. 100
Class	00	. 100
Units		0 100
Occupancy	00	NONE 100
Quality	03	Quality Level 03
DOR CODE	3800	GOLF COURSES
MAP NUM		MKT AREA 01
NEIGHBORHOOD/LOC	1010.00	

AREA TYPE	TOTAL GROSS AREA	PCT OF BASE	TOT ADJ AREA	SUBAREA MARKET VALUE
BAS	5,264	100	5,264	99,727
UCP	336	40	134	2,539
TOTALS	5,600		5,398	102,265

MARKET ADJUSTMENTS

TYPE	MDL	EFF. AREA	TOT ADJ PTS	EFF. BASE RATE	REPL. COST NEW	AYB	EYB	ECON	FNCT		NORM	% COND
4807	06	5,398	79.7640	37.89	204,530	2007	2007	0	0	0	50.00	50.00

5 PREFAB MTL – 0% - 0 Heated Area: 5264 HX Base Yr

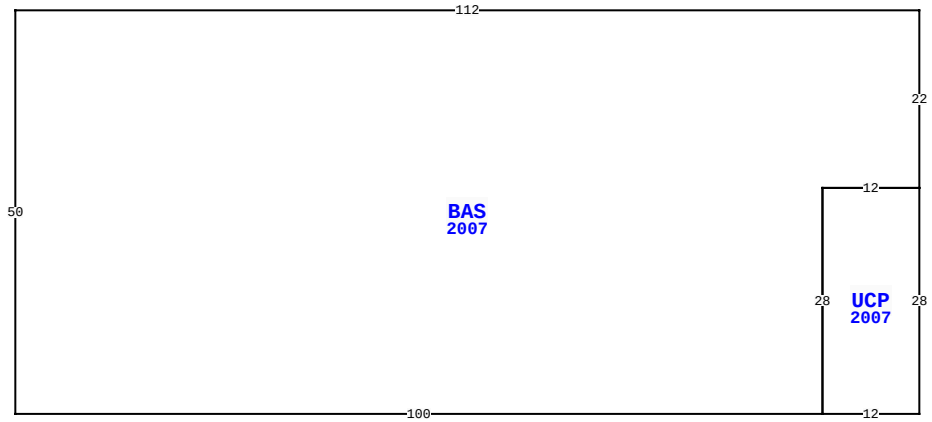

BLD DATE	10/31/2022	HS	LGL DATE
XF DATE	10/31/2022	HS	LAND DATE 08/11/2020 KK
INC DATE			AG DATE

4477 BUCCANEER TRL, FERNANDINA BEACH

VALUATION SUMMARY

VALUATION BY	STANDARD
Tax Group: 2	Tax Dist:
BUILDING MARKET VALUE	1,162,217
TOTAL MARKET OB/XF VALUE	1,061,841
TOTAL LAND VALUE - MARKET	419,048
TOTAL MARKET VALUE	2,643,106
SOH/AGL Deduction	893,542
ASSESSED VALUE	1,749,564
TOTAL EXEMPTION VALUE	0
BASE TAXABLE VALUE	1,749,564
TOTAL JUST VALUE	2,643,106
NCON VALUE	0
INCOME VALUE	
PREVIOUS YEAR MKT VALUE	1,590,513

PERMIT NUM	DESCRIPTION	AMT	ISSUED
20071867	OTHER	2,500	10/08/2007
20071462	GAS	600	08/08/2007
20071400	NEW CONSTR	186,000	07/30/2007
20071201	H/AC	1,500	06/27/2007
20071173	GAS	1,250	06/25/2007
20070715	H/AC	19,448	04/26/2007

SALES DATA

OFF RECORD Number	DATE	TYPE INST	Q / U	V / I	RSN CD	SALE PRICE
1751/0435	7/29/2011	QC	U	I	11	100
GRANTOR: THE NATIONAL BANK OF						
GRANTEE: THE SUMMERTON INN I						
1704/0456	10/12/2010	CT	U	I	18	100
GRANTOR: CLERK OF COURT						
GRANTEE: THE NATIONAL BANK O						

BUILDING NOTES

BUILDING DIMENSIONS

BAS=[YR=2007] W112S50E100UCP=[YR=2007] E12
N28W12S28$N28E12N22$.

EXTRA FEATURES

LN	OB/XF CODE	DESCRIPTION	BLD	CAP	L	W	UNITS	UT	Adj R	ADJ UNIT PRICE	ORIG COND	YEAR ON	YEAR ACTUAL	Q	% COND	OB/XF MKT VALUE	NOTES
24	0855	CONC PAVER	0	0	0	0	4,567.00	SF	10.00	10.00	100	2007	2007	3	89	40,646	
25	0402	CONC BUMPE	0	0	0	0	97.00	UT	25.00	25.00	100	2007	2007	3	92	2,231	
26	0802	ASPHALT B	0	0	0	0	610.00	SF	2.40	2.40	100	2007	2007	3	62	908	
27	0803	ASPHALT C	0	0	0	0	5,046.00	SF	2.00	2.00	100	2007	2007	3	62	6,257	
28	0812	CONCRETE C	0	0	0	0	3,389.00	SF	4.00	4.00	100	2007	2007	3	89	12,065	
29	1128	BRICK 12"	0	0	0	0	50.00	SF	14.00	14.00	100	2007	2007	3	97	679	
30	0964	HALON SYST	0	0	9	4	36.00	SF	50.00	50.00	100	2007	2007	3	89	1,602	
31	0418	EXHST FAN	0	0	0	0	2.00	UT	400.00	400.00	100	2007	2007	3	35	280	
32	6002	EL ROLL DR	0	0	8	8	4.00	UT	900.00	900.00	100	2007	2007	3	35	1,260	
33	0418	EXHST FAN	0	0	0	0	2.00	UT	400.00	400.00	100	2007	2007	3	35	280	

TOTAL OB/XF 66,208

LAND DESCRIPTION

LN	USE CODE	CLS	LAND USE DESCRIPTION	CAP	RD	LOC ZONE	FRONT	DEPTH	TOT LND UTS	UNIT TYPE	DT	DPTH FACT	% COND	TOT ADJ	UNIT PRICE	ADJ UNIT PRICE	LAND VALUE	OTHER ADJUSTMENTS AND NOTES	YEAR	DENSITY	DECL	FRZ	YR	CONSRV

REVIEW DATE 10/31/2022 BY HS Total Acres: 310.43 Total Land Value: 419,048 Market: 0 Agricultural: 0 Common: 419,048 PRINTED 08/02/2023 BY SYS

PT OF GOVT LOTS 3,4 OF
SEC 6-2N-28E & PT J PELOT
GRANT SEC 11-2N-28E IN

CITY OF FERNANDINA BEACH/
C/O AMELIA RIVER HOLDINGS LLC, ATT:TOM MILLER
FERNANDINA BEACH, FL 32034

2023

11-2N-28-0000-0005-00L1

NASSAU COUNTY PROPERTY

BUILDING CHARACTERISTICS

ELEMENT	CD	CONSTRUCTION
Exterior Wall	10	ABOVE AVG 100
Roof Structur	04	WOOD TRUSS 100
Roof Cover	03	COMP SHNGL 100
Interior Wall	05	DRYWALL 100
Interior Floo	11	CLAY TILE 100
Ceiling	02	F.NOT SUS 100
Air Condition	03	CENTRAL 100
Heating Type	04	AIR DUCTED 100
Fixtures		4 100
Frame	02	WOOD FRAME 100
Story Height		8 100
RMS		1 100
Stories	1.	1. 100
Units		0 100
Occupancy	00	NONE 100
Quality	03	Quality Level 03

DOR CODE	3800	GOLF COURSES	
MAP NUM		MKT AREA	01
NEIGHBORHOOD/LOC	1010.00		

AREA TYPE	TOTAL GROSS AREA	PCT OF BASE	TOT ADJ AREA	SUBAREA MARKET VALUE
BAS	117	100	117	15,054
FOP	104	30	31	3,989
TOTALS	221		148	19,043

MARKET ADJUSTMENTS

TYPE	MDL	EFF. AREA	TOT ADJ PTS	EFF. BASE RATE	REPL. COST NEW	AYB	EYB	ECON	FNCT	AP	NORM	% COND
3803	04	148	120.0150	210.93	31,218	2008	2008	0	0	25	14.00	61.00

6 RSTRM BLDG – 0% - 0 Heated Area: 117 HX Base Yr

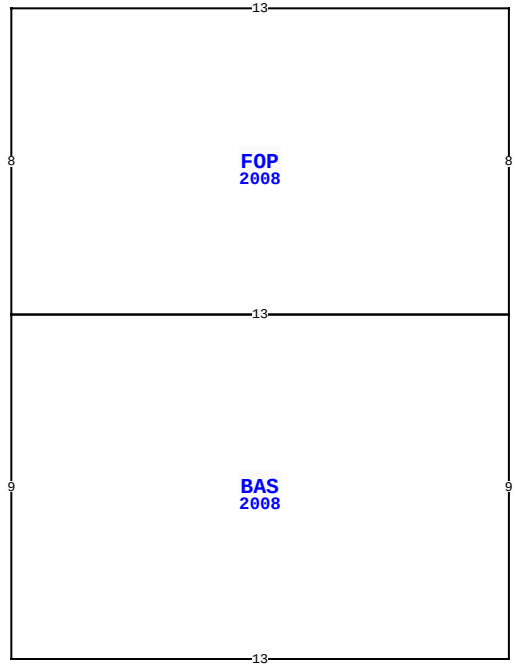

BLD DATE	10/31/2022	HS	LGL DATE
XF DATE	10/31/2022	HS	LAND DATE 08/11/2020 KK
INC DATE			AG DATE

4477 BUCCANEER TRL, FERNANDINA BEACH

NASSAU COUNTY PROPERTY — VALUATION SUMMARY

VALUATION BY	STANDARD
Tax Group: 2	Tax Dist:
BUILDING MARKET VALUE	1,162,217
TOTAL MARKET OB/XF VALUE	1,061,841
TOTAL LAND VALUE - MARKET	419,048
TOTAL MARKET VALUE	2,643,106
SOH/AGL Deduction	893,542
ASSESSED VALUE	1,749,564
TOTAL EXEMPTION VALUE	0
BASE TAXABLE VALUE	1,749,564
TOTAL JUST VALUE	2,643,106
NCON VALUE	0
INCOME VALUE	
PREVIOUS YEAR MKT VALUE	1,590,513

PERMIT NUM	DESCRIPTION	AMT	ISSUED
20070693	OTHER	30,000	04/25/2007
20070678	ELEC OTHER	60,000	04/23/2007
20070522	NEW CONSTR	1,000,000	03/30/2007
B0003347	NEW CONSTR	16,500	06/27/2000
B991725	NEW CONSTR	89,000	12/03/1999
B991224	XFOB	10,000	09/09/1999

SALES DATA

OFF RECORD Number	DATE	TYPE INST	Q / U	V / I	RSN CD	SALE PRICE
1751/0435	7/29/2011	QC	U	I	11	100
GRANTOR: THE NATIONAL BANK OF						
GRANTEE: THE SUMMERTON INN I						
1704/0456	10/12/2010	CT	U	I	18	100
GRANTOR: CLERK OF COURT						
GRANTEE: THE NATIONAL BANK O						

BUILDING NOTES

EXTRA FEATURES

LN	OB/XF CODE	DESCRIPTION	BLD	CAP	L	W	UNITS	UT	Adj R	ADJ UNIT PRICE	ORIG COND	YEAR ON	YEAR ACTUAL	Q	% COND	OB/XF MKT VALUE	NOTES
34	0978	SECURTY LT	0	0	0	0	4.00	UT	450.00	450.00	100	2007	2007	3	74	1,332	
35	0966	FIRE SPRNK	0	0	0	0	3,653.00	SF	3.00	3.00	100	2007	2007	3	89	9,754	
37	0142	BAR TOP A	0	0	0	0	19.00	LF	165.00	165.00	100	2012	2012	3	60	1,881	
38	0855	CONC PAVER	0	0	0	0	21,810.00	SF	5.00	5.00	100	2022	2022	3	100	109,050	

BUILDING DIMENSIONS

FOP=[YR=2008] W13S8E13BAS=[YR=2008] W13S9 E13N9$N8$.

LAND DESCRIPTION

TOTAL OB/XF 122,017

LN	USE CODE	CLS	LAND USE DESCRIPTION	CAP	RD	LOC ZONE	FRONT	DEPTH	TOT LND UTS	UNIT TYPE	DT	DPTH FACT	% COND	TOT ADJ	UNIT PRICE	ADJ UNIT PRICE	LAND VALUE	OTHER ADJUSTMENTS AND NOTES	YEAR	DENSITY	DECL	FRZ	YR	CONSRV

REVIEW DATE 10/31/2022 BY HS Total Acres: 310.43 Total Land Value: 419,048 Market: 0 Agricultural: 0 Common: 419,048 PRINTED 08/02/2023 BY SYS

PT OF GOVT LOTS 3,4 OF
SEC 6-2N-28E & PT J PELOT
GRANT SEC 11-2N-28E IN

CITY OF FERNANDINA BEACH/
C/O AMELIA RIVER HOLDINGS LLC, ATT:TOM MILLER
FERNANDINA BEACH, FL 32034

2023

11-2N-28-0000-0005-00L1

BUILDING CHARACTERISTICS

ELEMENT	CD	CONSTRUCTION
Exterior Wall	25	MOD METAL 100
Roof Structur	10	STEEL FRME 100
Roof Cover	12	MODULAR MT 100
Interior Wall	01	MINIMUM 100
Interior Floo	03	CONC FINSH 100
Ceiling	04	NONE 100
Air Condition	01	NONE 100
Heating Type	01	NONE 100
Plumbing		0 100
Frame	05	STEEL 100
Story Height		9 100
RMS		1 100
Stories	1.	1. 100
Class	00	. 100
Units		0 100
Occupancy	00	NONE 100
Quality	04	Quality Level 04
DOR CODE	3800	GOLF COURSES
MAP NUM		MKT AREA 01
NEIGHBORHOOD/LOC	1010.00	

AREA TYPE	TOTAL GROSS AREA	PCT OF BASE	TOT ADJ AREA	SUBAREA MARKET VALUE
BAS	960	100	960	25,472
TOTALS	960		960	25,472

MARKET ADJUSTMENTS

TYPE	MDL	EFF. AREA	TOT ADJ PTS	EFF. BASE RATE	REPL. COST NEW	AYB	EYB	ECON	FNCT		NORM	% COND
4807	06	960	85.9459	40.82	39,187	2013	2013	0	0	0	35.00	65.00

7 PREFAB MTL – 0% - 0 Heated Area: 960 HX Base Yr

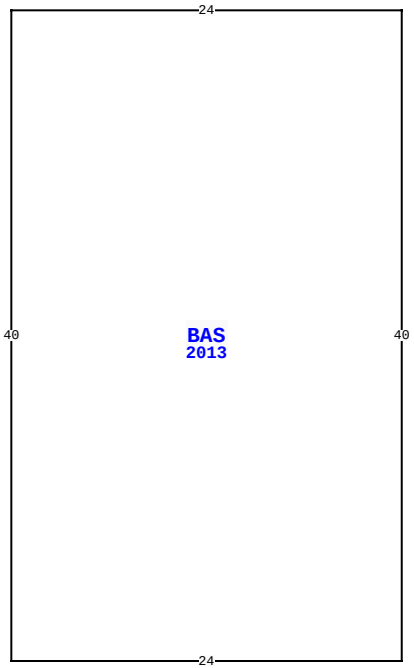

BLD DATE	10/31/2022	HS	LGL DATE
XF DATE	10/31/2022	HS	LAND DATE 08/11/2020 KK
INC DATE			AG DATE

4477 BUCCANEER TRL, FERNANDINA BEACH

NASSAU COUNTY PROPERTY

PAGE 5 of 6 2

VALUATION SUMMARY

VALUATION BY	STANDARD
Tax Group: 2	Tax Dist:
BUILDING MARKET VALUE	1,162,217
TOTAL MARKET OB/XF VALUE	1,061,841
TOTAL LAND VALUE - MARKET	419,048
TOTAL MARKET VALUE	2,643,106
SOH/AGL Deduction	893,542
ASSESSED VALUE	1,749,564
TOTAL EXEMPTION VALUE	0
BASE TAXABLE VALUE	1,749,564
TOTAL JUST VALUE	2,643,106
NCON VALUE	0
INCOME VALUE	
PREVIOUS YEAR MKT VALUE	1,590,513

PERMIT NUM	DESCRIPTION	AMT	ISSUED

SALES DATA

OFF RECORD Number	DATE	TYPE INST	Q / U	V / I	RSN CD	SALE PRICE
1751/0435	7/29/2011	QC	U	I	11	100
GRANTOR: THE NATIONAL BANK OF						
GRANTEE: THE SUMMERTON INN I						
1704/0456	10/12/2010	CT	U	I	18	100
GRANTOR: CLERK OF COURT						
GRANTEE: THE NATIONAL BANK O						

BUILDING NOTES

BUILDING DIMENSIONS

BAS=[YR=2013] W24 S40 E24 N40$.

EXTRA FEATURES

L N	OB/XF CODE	DESCRIPTION	BLD	CAP	L	W	UNITS	UT	Adj R	ADJ UNIT PRICE	ORIG COND	YEAR ON	YEAR ACTUAL	Q	% COND	OB/XF MKT VALUE	NOTES

LAND DESCRIPTION

TOTAL OB/XF 0

L N	USE CODE	CLS	LAND USE DESCRIPTION	CAP	R D	LOC ZONE	FRONT	DEPTH	TOT LND UTS	UNIT TYPE	D T	DPTH FACT	% COND	TOT ADJ	UNIT PRICE	ADJ UNIT PRICE	LAND VALUE	OTHER ADJUSTMENTS AND NOTES	YEAR	DENSITY	DECL	FRZ	YR	CONSRV

REVIEW DATE 10/31/2022 BY HS Total Acres: 310.43 Total Land Value: 419,048 Market: 0 Agricultural: 0 Common: 419,048 PRINTED 08/02/2023 BY SYS

PT OF GOVT LOTS 3,4 OF
SEC 6-2N-28E & PT J PELOT
GRANT SEC 11-2N-28E IN

CITY OF FERNANDINA BEACH/
C/O AMELIA RIVER HOLDINGS LLC, ATT:TOM MILLER
FERNANDINA BEACH, FL 32034

2023

11-2N-28-0000-0005-00L1

NASSAU COUNTY PROPERTY

BUILDING CHARACTERISTICS

ELEMENT	CD	CONSTRUCTION
Exterior Wall	10	ABOVE AVG 100
Roof Structur	04	WOOD TRUSS 100
Roof Cover	03	COMP SHNGL 100
Interior Wall	05	DRYWALL 100
Interior Floo	13	LVT/LAMNT 100
Ceiling	02	F.NOT SUS 100
Air Condition	03	CENTRAL 100
Heating Type	04	AIR DUCTED 100
Fixtures		0 100
Frame	02	WOOD FRAME 100
Story Height		23 100
RMS		8 100
Stories	2.	2. 100
Units		0 100
Occupancy	00	NONE 100
Quality	04	Quality Level 04

DOR CODE	3800	GOLF COURSES	
MAP NUM		MKT AREA	01
NEIGHBORHOOD/LOC	1010.00		

AREA TYPE	TOTAL GROSS AREA	PCT OF BASE	TOT ADJ AREA	SUBAREA MARKET VALUE
BAS	3,280	100	3,280	531,557
CAN	480	30	144	23,337
FAT	661	20	132	21,392
STR	80	10	8	1,296
TOTALS	4,501		3,564	577,582

MARKET ADJUSTMENTS

TYPE	MDL	EFF. AREA	TOT ADJ PTS	EFF. BASE RATE	REPL. COST NEW	AYB	EYB	ECON	FNCT		NORM	% COND
0303	04	3,564	145.0240	162.06	577,582	2022	2022	0	0	0	0.00	100.00

8 CLUB HOUSE – 0% - 0 Heated Area: 3412 HX Base Yr

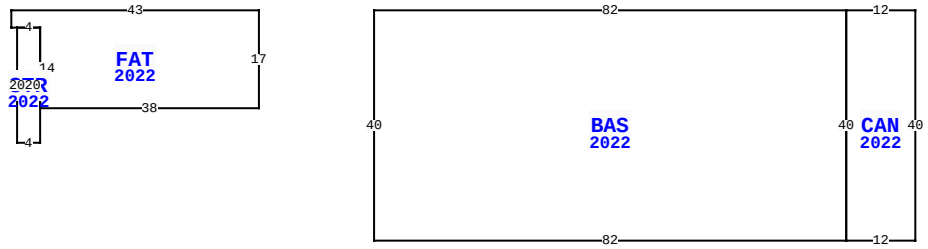

BLD DATE	10/31/2022	HS	LGL DATE
XF DATE	10/31/2022	HS	LAND DATE 08/11/2020 KK
INC DATE			AG DATE

4477 BUCCANEER TRL, FERNANDINA BEACH

VALUATION SUMMARY

VALUATION BY	STANDARD
Tax Group: 2	Tax Dist:
BUILDING MARKET VALUE	1,162,217
TOTAL MARKET OB/XF VALUE	1,061,841
TOTAL LAND VALUE - MARKET	419,048
TOTAL MARKET VALUE	2,643,106
SOH/AGL Deduction	893,542
ASSESSED VALUE	1,749,564
TOTAL EXEMPTION VALUE	0
BASE TAXABLE VALUE	1,749,564
TOTAL JUST VALUE	2,643,106
NCON VALUE	0
INCOME VALUE	
PREVIOUS YEAR MKT VALUE	1,590,513

PERMIT NUM	DESCRIPTION	AMT	ISSUED

SALES DATA

OFF RECORD Number	DATE	TYPE INST	Q / U	V / I	RSN CD	SALE PRICE
1751/0435	7/29/2011	QC	U	I	11	100
GRANTOR: THE NATIONAL BANK OF						
GRANTEE: THE SUMMERTON INN I						
1704/0456	10/12/2010	CT	U	I	18	100
GRANTOR: CLERK OF COURT						
GRANTEE: THE NATIONAL BANK O						

BUILDING NOTES

BUILDING DIMENSIONS

BAS=[YR=2022] S40 E82 CAN=[YR=2022] E12 N40 W12 S40$ N40 W82$ PTR= W20 FAT=[YR=2022] W43 S3 E1 STR=[YR=2022] E4 S20 W4 N20$ E4 S14 E38 N17$ E20$.

EXTRA FEATURES

L N	OB/XF CODE	DESCRIPTION	BLD	CAP	L	W	UNITS	UT	Adj R	ADJ UNIT PRICE	ORIG COND	YEAR ON	YEAR ACTUAL	Q	% COND	OB/XF MKT VALUE	NOTES

LAND DESCRIPTION

TOTAL OB/XF 0

L N	USE CODE	CLS	LAND USE DESCRIPTION	CAP	R D	LOC ZONE	FRONT	DEPTH	TOT LND UTS	UNIT TYPE	D T	DPTH FACT	% COND	TOT ADJ	UNIT PRICE	ADJ UNIT PRICE	LAND VALUE	OTHER ADJUSTMENTS AND NOTES	YEAR	DENSITY	DECL	FRZ	YR	CONSRV

REVIEW DATE 10/31/2022 BY HS Total Acres: 310.43 Total Land Value: 419,048 Market: 0 Agricultural: 0 Common: 419,048 PRINTED 08/02/2023 BY SYS