LOT 183
IN OR 1959/1413
TIMBER CREEK PLANTATION #3

LACOMBE DEAN MICHAEL & TIFFANY MARIE
76890 TIMBERCREEK BLVD
YULEE, FL 32097

2023

11-2N-26-2052-0183-0000

NASSAU COUNTY PROPERTY

BUILDING CHARACTERISTICS

ELEMENT	CD	CONSTRUCTION
Exterior Wall	16	WD FR STUC 100
Roof Structur	08	IRREGULAR 100
Roof Cover	03	COMP SHNGL 100
Interior Wall	05	DRYWALL 100
Interior Floo	14	CARPET 60
Interior Floo	11	CLAY TILE 40
Air Condition	03	CENTRAL 100
Heating Type	04	AIR DUCTED 100
Bedrooms		4 100
Bathrooms		3 100
Frame	02	WOOD FRAME 100
Stories	2.	2. 100
Units		0 100
Occupancy	00	NONE 100
Quality	03	Quality Level 03
DOR CODE	0100	SINGLE FAMILY
MAP NUM		MKT AREA 05
NEIGHBORHOOD/LOC	5005.00	

AREA TYPE	TOTAL GROSS AREA	PCT OF BASE	TOT ADJ AREA	SUBAREA MARKET VALUE
BAS	1,248	100	1,248	118,107
FGR	632	55	348	32,934
FOP	36	30	11	1,041
FOP	200	30	60	5,678
FUS	1,290	100	1,290	122,081
TOTALS	3,406		2,957	279,841

MARKET ADJUSTMENTS

TYPE	MDL	EFF. AREA	TOT ADJ PTS	EFF. BASE RATE	REPL. COST NEW	AYB	EYB	ECON	FNCT		NORM	% COND
0100	01	2,957	109.2280	98.58	291,501	2014	2014	0	0	0	4.00	96.00

1 SINGLE FAM – 100% - 2016 Heated Area: 2538 HX Base Yr 2016

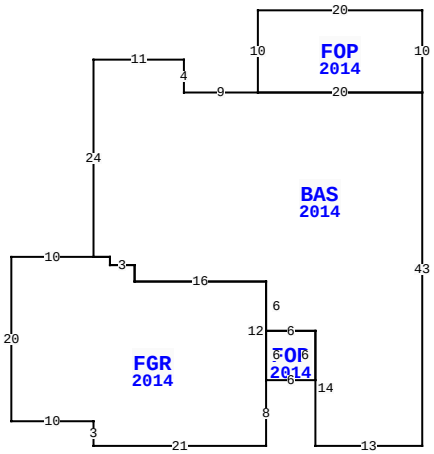

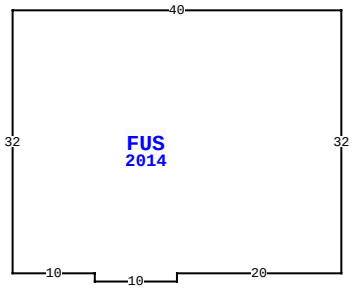

76890 TIMBERCREEK BLVD, YULEE

BLD DATE		LGL DATE	
XF DATE		LAND DATE	
INC DATE		AG DATE	

VALUATION SUMMARY

VALUATION BY		STANDARD
Tax Group: 4	Tax Dist:	
BUILDING MARKET VALUE		279,841
TOTAL MARKET OB/XF VALUE		14,245
TOTAL LAND VALUE - MARKET		55,000
TOTAL MARKET VALUE		349,086
SOH/AGL Deduction		123,291
ASSESSED VALUE		225,795
TOTAL EXEMPTION VALUE	HX HB VX	55,000
BASE TAXABLE VALUE		170,795
TOTAL JUST VALUE		349,086
NCON VALUE		0
INCOME VALUE		
PREVIOUS YEAR MKT VALUE		290,783

PERMIT NUM	DESCRIPTION	AMT	ISSUED
B1429369	CO ISSUED	0	12/30/2014
B1429369	NEW CONSTR	305,779	09/01/2014

SALES DATA

OFF RECORD Number	DATE	TYPE INST	Q U	V I	RSN CD	SALE PRICE
1959/1413	1/27/2015	SW	Q	I	01	228,100
GRANTOR: KB HOME JACKSONVILLE						
GRANTEE: LACOMBE DEAN MICHAE						
1841/1909	2/14/2013	WD	Q	V	05	638,000
GRANTOR: BWC LAND LLC						
GRANTEE: KB HOME JACKSONVILL						

BUILDING NOTES

BUILDING DIMENSIONS

FOP=[YR=2014] W20 S10 BAS=[YR=2014] W9 N4 W11 S24 FGR=[YR=2014] W10 S20 E10 S3 E21 N8 FOP=[YR=2014] E6 N6 W6 S6$ N12 W16 N2 W3 N1 W2$ E2 S1 E3 S2 E16 S6 E6 S14 E13 N43 W20$ E20 N10$ PTR=E20 FUS=[YR=2014] E40 S32 W20 S1 W10 N1 W10 N32$ W20 $.

EXTRA FEATURES

LN	OB/XF CODE	DESCRIPTION	BLD	CAP	L	W	UNITS	UT	Adj R	ADJ UNIT PRICE	ORIG COND	YEAR ON	YEAR ACTUAL	Q	% COND	OB/XF MKT VALUE	NOTES
1	0811	CONCRETE B	0	100	0	0	1,846.00	SF	5.20	5.20	100	2014	2014	3	95	9,119	
2	0476	VF 6 SBPL	0	100	0	0	180.00	LF	32.00	32.00	100	2014	2014	3	89	5,126	

LAND DESCRIPTION

TOTAL OB/XF 14,245

LN	USE CODE	CLS	LAND USE DESCRIPTION	CAP	RD	LOC ZONE	FRONT	DEPTH	TOT LND UTS	UNIT TYPE	DT	DPTH FACT	% COND	TOT ADJ	UNIT PRICE	ADJ UNIT PRICE	LAND VALUE	OTHER ADJUSTMENTS AND NOTES	YEAR	DENSITY	DECL	FRZ	YR	CONSRV
1	000100	C	SFR	100			0.00	0.00	1.00	LT		1.00	1.00	1.00	55,000.00	55,000.00	55,000							

REVIEW DATE 10/25/2019 BY KBA Total Acres: 0.00 Total Land Value: 55,000 Market: 0 Agricultural: 0 Common: 55,000 PRINTED 08/02/2023 BY SYS