LOT 10
TIMBER CREEK PLANTATION #3
PB 7/302

BURGESS SHANNON L & KIMBERLY S
76613 TIMBERCREEK BLVD
YULEE, FL 32097

2023

11-2N-26-2052-0010-0000

BUILDING CHARACTERISTICS

ELEMENT	CD	CONSTRUCTION
Exterior Wall	05	AVERAGE 70
Exterior Wall	16	WD FR STUC 30
Roof Structur	03	GABLE/HIP 100
Roof Cover	03	COMP SHNGL 100
Interior Wall	05	DRYWALL 100
Interior Floo	14	CARPET 80
Interior Floo	08	SHT VINYL 20
Air Condition	03	CENTRAL 100
Heating Type	04	AIR DUCTED 100
Bedrooms		3 100
Bathrooms		2 100
Frame	02	WOOD FRAME 100
Stories	1.	1. 100
Units		0 100
Occupancy	00	NONE 100
Quality	03	Quality Level 03
DOR CODE	0100	SINGLE FAMILY
MAP NUM		MKT AREA 05
NEIGHBORHOOD/LOC	5005.00	

AREA TYPE	TOTAL GROSS AREA	PCT OF BASE	TOT ADJ AREA	SUBAREA MARKET VALUE
BAS	1,672	100	1,672	150,737
FGR	736	55	405	36,512
FOP	37	30	11	992
FOP	78	30	23	2,074
PTO	130	5	6	541
TOTALS	2,653		2,117	190,854

MARKET ADJUSTMENTS

TYPE	MDL	EFF. AREA	TOT ADJ PTS	EFF. BASE RATE	REPL. COST NEW	AYB	EYB	ECON	FNCT		NORM	% COND
0100	01	2,117	104.7620	94.55	200,162	2012	2012	0	0	0	4.65	95.35

1 SINGLE FAM – 100% - 2022 Heated Area: 1672 HX Base Yr 2022

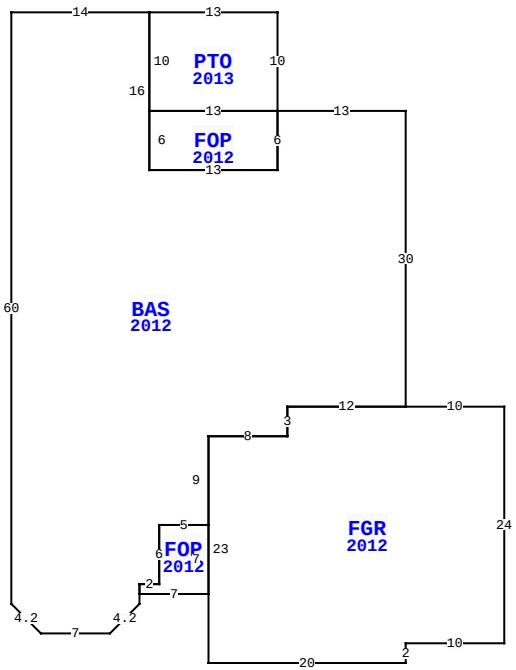

76613 TIMBERCREEK BLVD, YULEE

BLD DATE	09/19/2012 KK	LGL DATE	
XF DATE		LAND DATE	
INC DATE		AG DATE	

NASSAU COUNTY PROPERTY

PAGE 1 of 1 4

VALUATION SUMMARY

VALUATION BY		STANDARD
Tax Group: 4	Tax Dist:	
BUILDING MARKET VALUE		190,854
TOTAL MARKET OB/XF VALUE		5,536
TOTAL LAND VALUE - MARKET		55,000
TOTAL MARKET VALUE		251,390
SOH/AGL Deduction		32,382
ASSESSED VALUE		219,008
TOTAL EXEMPTION VALUE	HX HB	50,000
BASE TAXABLE VALUE		169,008
TOTAL JUST VALUE		251,390
NCON VALUE		0
INCOME VALUE		
PREVIOUS YEAR MKT VALUE		212,629

PERMIT NUM	DESCRIPTION	AMT	ISSUED
B26022	CO ISSUED	0	08/22/2012
M17250	H/AC	0	06/01/2012
E25051	TEMP POLE	0	05/01/2012
P15901	NEW CONSTR	0	05/01/2012
B26022	NEW CONSTR	206,071	05/01/2012

SALES DATA

OFF RECORD Number	DATE	TYPE INST	Q / U	V / I	RSN CD	SALE PRICE
2464/1494	5/25/2021	WD	Q	I	01	261,100
GRANTOR: GASSON TIMOTHY J & LO						
GRANTEE: BURGESS SHANNON L &						
2030/0220	2/17/2016	WD	Q	I	01	173,000
GRANTOR: MOORE LARRY D & LINDA						
GRANTEE: GASSON TIMOTHY J						

BUILDING NOTES

BUILDING DIMENSIONS

FGR=[YR=2012] W10 BAS=[YR=2012] N30 W13 PTO=[YR=2013] N10 W13 S10 FOP=[YR=2012] S6 E13 N6 W13$ E13$S6 W13 N16 W14 S60 D3 R3 E7 U3 R3 N1 FOP=[YR=2012] E7 N7 W5 S6 W2 S1$ N1 E2 N6 E5 N9 E8 N3 E12$ W12 S3 W8 S23 E20 N2 E10 N24$.

EXTRA FEATURES

LN	OB/XF CODE	DESCRIPTION	BLD	CAP	L	W	UNITS	UT	Adj R	ADJ UNIT PRICE	ORIG COND	YEAR ON	YEAR ACTUAL	Q	% COND	OB/XF MKT VALUE	NOTES
1	0812	CONCRETE C	0	100	0	0	1,404.00	SF	4.00	4.00	100	2012	2012	3	94	5,279	
2	0810	CONCRETE A	0	100	14	3	42.00	SF	6.50	6.50	100	2012	2012	3	94	257	

LAND DESCRIPTION

TOTAL OB/XF 5,536

LN	USE CODE	CLS	LAND USE DESCRIPTION	CAP	RD	LOC ZONE	FRONT	DEPTH	TOT LND UTS	UNIT TYPE	DT	DPTH FACT	% COND	TOT ADJ	UNIT PRICE	ADJ UNIT PRICE	LAND VALUE	OTHER ADJUSTMENTS AND NOTES	YEAR	DENSITY	DECL	FRZ	YR	CONSRV
1	000134	C	SFR POND	100	0003		0.00	0.00	1.00	LT		1.00	1.00	1.00	55,000.00	55,000.00	55,000							

REVIEW DATE 02/01/2018 BY KBX Total Acres: 0.00 Total Land Value: 55,000 Market: 0 Agricultural: 0 Common: 55,000 PRINTED 08/02/2023 BY SYS