LOT 123
IN OR 2210/1053
TIMBER CREEK PLANTATION #2

LOPEZ ABIGAIL
76429 TIMBERCREEK BLVD
YULEE, FL 32097

2023

11-2N-26-2051-0123-0000

BUILDING CHARACTERISTICS

ELEMENT	CD	CONSTRUCTION
Exterior Wall	16	WD FR STUC 100
Roof Structur	03	GABLE/HIP 100
Roof Cover	03	COMP SHNGL 100
Interior Wall	05	DRYWALL 100
Interior Floo	14	CARPET 70
Interior Floo	11	CLAY TILE 30
Air Condition	03	CENTRAL 100
Heating Type	04	AIR DUCTED 100
Bedrooms		3 100
Bathrooms		2 100
Frame	02	WOOD FRAME 100
Stories	1.	1. 100
Units		0 100
Occupancy	00	NONE 100
Quality	03	Quality Level 03
DOR CODE	0100	SINGLE FAMILY
MAP NUM		MKT AREA 05
NEIGHBORHOOD/LOC	5005.00	

AREA TYPE	TOTAL GROSS AREA	PCT OF BASE	TOT ADJ AREA	SUBAREA MARKET VALUE
BAS	1,853	100	1,853	170,554
FGR	725	55	399	36,725
FOP	15	30	4	368
FOP	70	30	21	1,933
PTO	210	5	10	921
TOTALS	2,873		2,287	210,500

MARKET ADJUSTMENTS

TYPE	MDL	EFF. AREA	TOT ADJ PTS	EFF. BASE RATE	REPL. COST NEW	AYB	EYB	ECON	FNCT		NORM	% COND
0100	01	2,287	109.6620	98.97	226,344	2008	2008	0	0	0	7.00	93.00

1 SINGLE FAM – 100% - 2009 Heated Area: 1853 HX Base Yr 2009

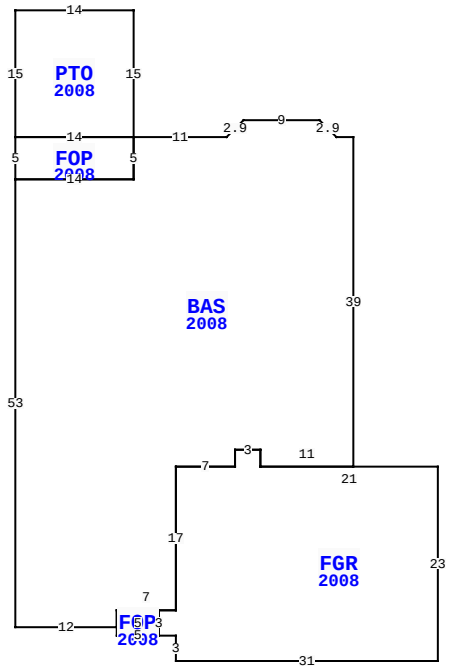

76429 TIMBERCREEK BLVD, YULEE

BLD DATE	04/16/2008	KK	LGL DATE
XF DATE			LAND DATE
INC DATE			AG DATE

NASSAU COUNTY PROPERTY

PAGE 1 of 1 4

VALUATION SUMMARY

VALUATION BY		STANDARD
Tax Group: 4	Tax Dist:	
BUILDING MARKET VALUE		210,500
TOTAL MARKET OB/XF VALUE		7,179
TOTAL LAND VALUE - MARKET		55,000
TOTAL MARKET VALUE		272,679
SOH/AGL Deduction		115,292
ASSESSED VALUE		157,387
TOTAL EXEMPTION VALUE	HX HB VX	55,000
BASE TAXABLE VALUE		102,387
TOTAL JUST VALUE		272,679
NCON VALUE		0
INCOME VALUE		
PREVIOUS YEAR MKT VALUE		229,184

PERMIT NUM	DESCRIPTION	AMT	ISSUED
M13609	MECH OTHER	0	02/01/2008
C21003	CO ISSUED	180,246	01/01/2008
R10986	REPAIR/RRF	2,000	01/01/2008
P12990	OTHER	0	01/01/2008
B21003	NEW CONSTR	180,246	01/01/2008

SALES DATA

OFF RECORD Number	DATE	TYPE INST	Q U	V I	RSN CD	SALE PRICE
2210/1053	6/14/2018	WD	U	I	11	100
GRANTOR: MELENDEZ JOSE						
GRANTEE: LOPEZ ABIGAIL						
1564/0456	4/30/2008	WD	Q	I		236,300
GRANTOR: KB HOME JACKSONVILLE						
GRANTEE: MELENDEZ JOSE & ABI						

BUILDING NOTES

BUILDING DIMENSIONS

BAS=[YR=2008] W2 U2 L2 W9 D2 L2 W11 PTO=[YR=2008] N15 W14 S15 E14$ FOP=[YR=2008] W14 S5 E14 N5 $ S5 W14 S53E12 FOP=[YR=2008] S1 E5 FGR=[YR=2008] E2 S3 E31 N23 W21 N2 W3 S2 W7 S17 W2 S3$ N3 W5 S2$ N2 E7 N17 E7 N2 E3 S2 E11 N39$.

EXTRA FEATURES

LN	OB/XF CODE	DESCRIPTION	BLD	CAP	L	W	UNITS	UT	Adj R	ADJ UNIT PRICE	ORIG COND	YEAR ON	YEAR ACTUAL	Q	% COND	OB/XF MKT VALUE	NOTES
1	0504	FP-ELECTRI	0	100	0	0	1.00	UT	2,000.00	2,000.00	100	2008	2008	3	93	1,860	
2	0812	CONCRETE C	0	100	0	0	1,424.00	SF	4.00	4.00	100	2008	2008	3	90	5,126	
3	0810	CONCRETE A	0	100	11	3	33.00	SF	6.50	6.50	100	2008	2008	3	90	193	

LAND DESCRIPTION

TOTAL OB/XF 7,179

LN	USE CODE	CLS	LAND USE DESCRIPTION	CAP	RD	LOC ZONE	FRONT	DEPTH	TOT LND UTS	UNIT TYPE	DT	DPTH FACT	% COND	TOT ADJ	UNIT PRICE	ADJ UNIT PRICE	LAND VALUE	OTHER ADJUSTMENTS AND NOTES	YEAR	DENSITY	DECL	FRZ	YR	CONSRV
1	000100	C	SFR	100	0003		0.00	0.00	1.00	LT		1.00	1.00	1.00	55,000.00	55,000.00	55,000							

REVIEW DATE 02/01/2018 BY KBX Total Acres: 0.00 Total Land Value: 55,000 Market: 0 Agricultural: 0 Common: 55,000 PRINTED 08/02/2023 BY SYS