LOT 29
TIMBER CREEK PLANTATION #2
PB 7/165

WILLIAMS NATHANIEL L & TYKERA
75067 RAVENWOOD DRIVE
YULEE, FL 32097

2023

11-2N-26-2051-0029-0000

BUILDING CHARACTERISTICS

ELEMENT	CD	CONSTRUCTION
Exterior Wall	16	WD FR STUC 100
Roof Structur	03	GABLE/HIP 100
Roof Cover	03	COMP SHNGL 100
Interior Wall	05	DRYWALL 100
Interior Floo	14	CARPET 80
Interior Floo	08	SHT VINYL 20
Air Condition	03	CENTRAL 100
Heating Type	04	AIR DUCTED 100
Bedrooms		3 100
Bathrooms		2.5 100
Frame	02	WOOD FRAME 100
Stories	2.	2. 100
Units		0 100
Occupancy	00	NONE 100
Quality	03	Quality Level 03

DOR CODE	0100	SINGLE FAMILY	
MAP NUM		MKT AREA	05
NEIGHBORHOOD/LOC	5005.00		

AREA TYPE	TOTAL GROSS AREA	PCT OF BASE	TOT ADJ AREA	SUBAREA MARKET VALUE
BAS	1,708	100	1,708	134,749
FGR	420	55	231	18,224
FOP	108	30	32	2,524
FUS	1,792	100	1,792	141,377
PTO	210	5	10	789
TOTALS	4,238		3,773	297,664

MARKET ADJUSTMENTS

TYPE	MDL	EFF. AREA	TOT ADJ PTS	EFF. BASE RATE	REPL. COST NEW	AYB	EYB	ECON	FNCT		NORM	% COND
0100	01	3,773	94.5000	85.29	321,799	2007	2007	0	0	0	7.50	92.50

1 SINGLE FAM – 100% - 2021 Heated Area: 3500 HX Base Yr 2021

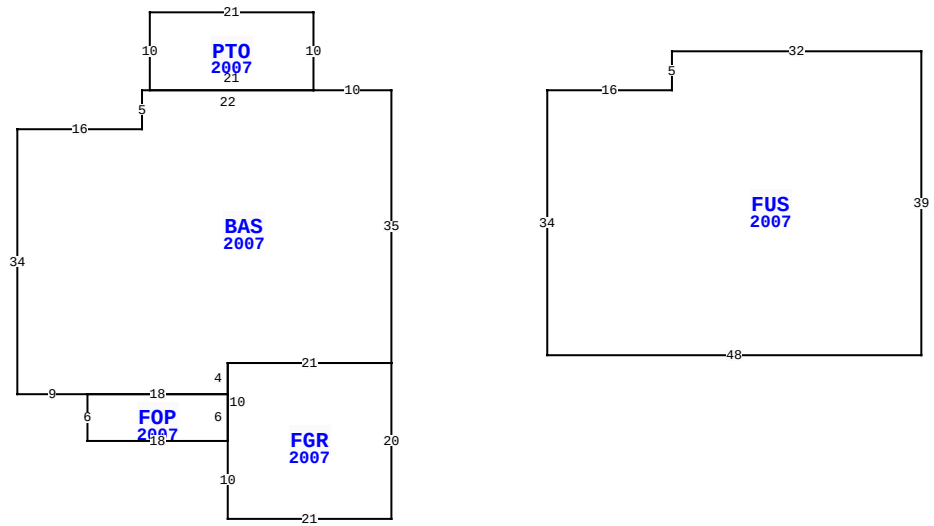

75067 RAVENWOOD DR, YULEE

BLD DATE	01/28/2013	KK	LGL DATE
XF DATE	11/20/2007	JM	LAND DATE
INC DATE			AG DATE

NASSAU COUNTY PROPERTY

PAGE 1 of 1 4

VALUATION SUMMARY

VALUATION BY		STANDARD
Tax Group: 4	Tax Dist:	
BUILDING MARKET VALUE		297,664
TOTAL MARKET OB/XF VALUE		3,207
TOTAL LAND VALUE - MARKET		55,000
TOTAL MARKET VALUE		355,871
SOH/AGL Deduction		70,673
ASSESSED VALUE		285,198
TOTAL EXEMPTION VALUE	HX HB	50,000
BASE TAXABLE VALUE		235,198
TOTAL JUST VALUE		355,871
NCON VALUE		0
INCOME VALUE		
PREVIOUS YEAR MKT VALUE		300,318

PERMIT NUM	DESCRIPTION	AMT	ISSUED
E19674	ELEC OTHER	1,500	07/01/2007
M13132	MECH OTHER	0	07/01/2007
C20069	CO ISSUED	0	06/01/2007
P12487	OTHER	0	06/01/2007
R10467	REPAIR/RRF	2,000	06/01/2007
B20069	NEW CONSTR	273,570	06/01/2007

SALES DATA

OFF RECORD Number	DATE	TYPE INST	Q / U	V / I	RSN CD	SALE PRICE
2365/1497	5/06/2020	SW	Q	I	01	269,000
GRANTOR: MFRA TRUST 2014-2						
GRANTEE: WILLIAMS NATHANIEL						
2338/0733	1/30/2020	CT	U	I	18	69,100
GRANTOR: CLERK OF COURT						
GRANTEE: WILMINGTON TRUST						

BUILDING NOTES

BUILDING DIMENSIONS

BAS=[YR=2007] W10 PTO=[YR=2007] N10 W21 S10 E21$ W22 S5 W16 S34 E9 FOP=[YR=2007] S6 E18 FGR=[YR=2007] S10 E21 N20 W21 S10$ N6 W18$ E18 N4 E21 N35$ PTR=E20 FUS=[YR=2007] E16 N5 E32 S39 W48 N34$ W20$.

EXTRA FEATURES

LN	OB/XF CODE	DESCRIPTION	BLD	CAP	L	W	UNITS	UT	Adj R	ADJ UNIT PRICE	ORIG COND	YEAR ON	YEAR ACTUAL	Q	% COND	OB/XF MKT VALUE	NOTES
1	0811	CONCRETE B	0	100	0	0	693.00	SF	5.20	5.20	100	2007	2007	3	89	3,207	

LAND DESCRIPTION

TOTAL OB/XF 3,207

LN	USE CODE	CLS	LAND USE DESCRIPTION	CAP	RD	LOC ZONE	FRONT	DEPTH	TOT LND UTS	UNIT TYPE	DT	DPTH FACT	% COND	TOT ADJ	UNIT PRICE	ADJ UNIT PRICE	LAND VALUE	OTHER ADJUSTMENTS AND NOTES	YEAR	DENSITY	DECL	FRZ	YR	CONSRV
1	000100	C	SFR	100	0003		0.00	0.00	1.00	LT		1.00	1.00	1.00	55,000.00	55,000.00	55,000							

REVIEW DATE 01/30/2018 BY KBX Total Acres: 0.00 Total Land Value: 55,000 Market: 0 Agricultural: 0 Common: 55,000 PRINTED 08/02/2023 BY SYS