LOT 176
TIMBER CREEK PLANTATION #1
PB 6/394

MCGUIRE TIMOTHY D & LAURA M
76100 DEERWOOD DRIVE
YULEE, FL 32097

2023

11-2N-26-2050-0176-0000

NASSAU COUNTY PROPERTY

BUILDING CHARACTERISTICS

ELEMENT	CD	CONSTRUCTION
Exterior Wall	16	WD FR STUC 100
Roof Structur	03	GABLE/HIP 100
Roof Cover	03	COMP SHNGL 100
Interior Wall	05	DRYWALL 100
Interior Floo	14	CARPET 70
Interior Floo	08	SHT VINYL 30
Air Condition	03	CENTRAL 100
Heating Type	04	AIR DUCTED 100
Bedrooms		4 100
Bathrooms		2.5 100
Frame	02	WOOD FRAME 100
Stories	2.	2. 100
Units		0 100
Occupancy	00	NONE 100
Quality	03	Quality Level 03

DOR CODE 0100 SINGLE FAMILY
MAP NUM | MKT AREA 05
NEIGHBORHOOD/LOC 5005.00

AREA TYPE	TOTAL GROSS AREA	PCT OF BASE	TOT ADJ AREA	SUBAREA MARKET VALUE
BAS	1,047	100	1,047	90,131
FGR	441	55	243	20,919
FOP	35	30	10	861
FUS	1,448	100	1,448	124,650
PTO	100	5	5	431
TOTALS	3,071		2,753	236,990

MARKET ADJUSTMENTS

TYPE	MDL	EFF. AREA	TOT ADJ PTS	EFF. BASE RATE	REPL. COST NEW	AYB	EYB	ECON	FNCT		NORM	% COND
0100	01	2,753	103.6800	93.57	257,598	2006	2006	0	0	0	8.00	92.00

1 SINGLE FAM – 0% - 0 Heated Area: 2495 HX Base Yr

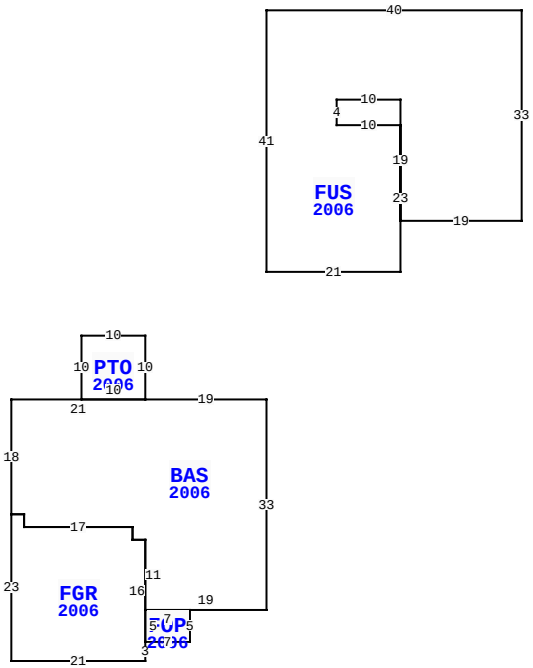

76100 DEERWOOD DR, YULEE

BLD DATE	02/05/2013 KK	LGL DATE	
XF DATE		LAND DATE	
INC DATE		AG DATE	

NASSAU COUNTY PROPERTY — VALUATION SUMMARY

VALUATION BY	STANDARD
Tax Group: 4	Tax Dist:
BUILDING MARKET VALUE	236,990
TOTAL MARKET OB/XF VALUE	2,833
TOTAL LAND VALUE - MARKET	55,000
TOTAL MARKET VALUE	294,823
SOH/AGL Deduction	27,934
ASSESSED VALUE	266,889
TOTAL EXEMPTION VALUE	0
BASE TAXABLE VALUE	266,889
TOTAL JUST VALUE	294,823
NCON VALUE	0
INCOME VALUE	
PREVIOUS YEAR MKT VALUE	249,467

PERMIT NUM	DESCRIPTION	AMT	ISSUED
B15922	NEW CONSTR	177,857	01/27/2006
E16180	ELEC OTHER	1,500	11/01/2005
M10444	MECH OTHER	0	10/01/2005
P10020	OTHER	0	09/01/2005
R08140	REPAIR/RRF	2,000	08/01/2005

SALES DATA

OFF RECORD Number	DATE	TYPE INST	Q / U	V / I	RSN CD	SALE PRICE
2262/0609	3/12/2019	WD	Q	I	01	245,000
GRANTOR: GARRISON MATTHEW & KI						
GRANTEE: MCGUIRE TIMOTHY D &						
1590/1424	10/27/2008	WD	U	I	05	172,900
GRANTOR: BANK OF NEW YORK						
GRANTEE: GARRISON MATTHEW &						

BUILDING NOTES

BUILDING DIMENSIONS

BAS=[YR=2006] W19 PTO=[YR=2006] N10 W10 S10 E10$ W21 S18 FGR=[YR=2006] S23 E21 N3 FOP=[YR=2006] E7 N5 W7 S5$ N16 W2 N2 W17 N2 W2$ E2 S2 E17 S2 E2 S11 E19 N33$ PTR=N20 FUS=[YR=2006] N41 E40 S33 W19 N19 W10 S4 E10 S23 W21$ S20$.

EXTRA FEATURES

LN	OB/XF CODE	DESCRIPTION	BLD	CAP	L	W	UNITS	UT	Adj R	ADJ UNIT PRICE	ORIG COND	YEAR ON	YEAR ACTUAL	Q	% COND	OB/XF MKT VALUE	NOTES
1	0811	CONCRETE B	0	0	0	0	619.00	SF	5.20	5.20	100	2006	2006	3	88	2,833	

LAND DESCRIPTION

TOTAL OB/XF 2,833

LN	USE CODE	CLS	LAND USE DESCRIPTION	CAP	RD	LOC ZONE	FRONT	DEPTH	TOT LND UTS	UNIT TYPE	DT	DPTH FACT	% COND	TOT ADJ	UNIT PRICE	ADJ UNIT PRICE	LAND VALUE	OTHER ADJUSTMENTS AND NOTES	YEAR	DENSITY	DECL	FRZ	YR	CONSRV
1	000134	C	SFR POND	0	0003	PUD	0.00	0.00	1.00	LT		1.00	1.00	1.00	55,000.00	55,000.00	55,000							

REVIEW DATE 01/30/2018 BY KBX Total Acres: 0.00 Total Land Value: 55,000 Market: 0 Agricultural: 0 Common: 55,000 PRINTED 08/02/2023 BY SYS