LOT 120
IN OR 1843/797
TIMBER CREEK PLANTATION #1

BEVERLY JUSTIN
76070 HARLEY CT
YULEE, FL 32097

2023

11-2N-26-2050-0120-0000

NASSAU COUNTY PROPERTY

BUILDING CHARACTERISTICS

ELEMENT	CD	CONSTRUCTION
Exterior Wall	16	WD FR STUC 50
Exterior Wall	17	CB STUCCO 50
Roof Structur	03	GABLE/HIP 100
Roof Cover	03	COMP SHNGL 100
Interior Wall	05	DRYWALL 100
Interior Floo	14	CARPET 80
Interior Floo	08	SHT VINYL 20
Air Condition	03	CENTRAL 100
Heating Type	04	AIR DUCTED 100
Bedrooms		4 100
Bathrooms		2.5 100
Frame	02	WOOD FRAME 100
Stories	2.	2. 100
Units		0 100
BUD4 Adjustme	03	. 100
Occupancy	00	NONE 100
Quality	03	Quality Level 03
DOR CODE	0100	SINGLE FAMILY
MAP NUM		MKT AREA 05
NEIGHBORHOOD/LOC	5005.00	

AREA TYPE	TOTAL GROSS AREA	PCT OF BASE	TOT ADJ AREA	SUBAREA MARKET VALUE
BAS	1,256	100	1,256	72,046
FGR	560	55	308	17,668
FOP	24	30	7	402
FUS	1,723	100	1,723	98,834
USP	180	30	54	3,097
TOTALS	3,743		3,348	192,046

MARKET ADJUSTMENTS

TYPE	MDL	EFF. AREA	TOT ADJ PTS	EFF. BASE RATE	REPL. COST NEW	AYB	EYB	ECON	FNCT		NORM	% COND
0100	01	3,348	69.4600	62.69	209,886	2005	2005	0	0	0	8.50	91.50

1 SINGLE FAM – 0% - 0 Heated Area: 2979 HX Base Yr

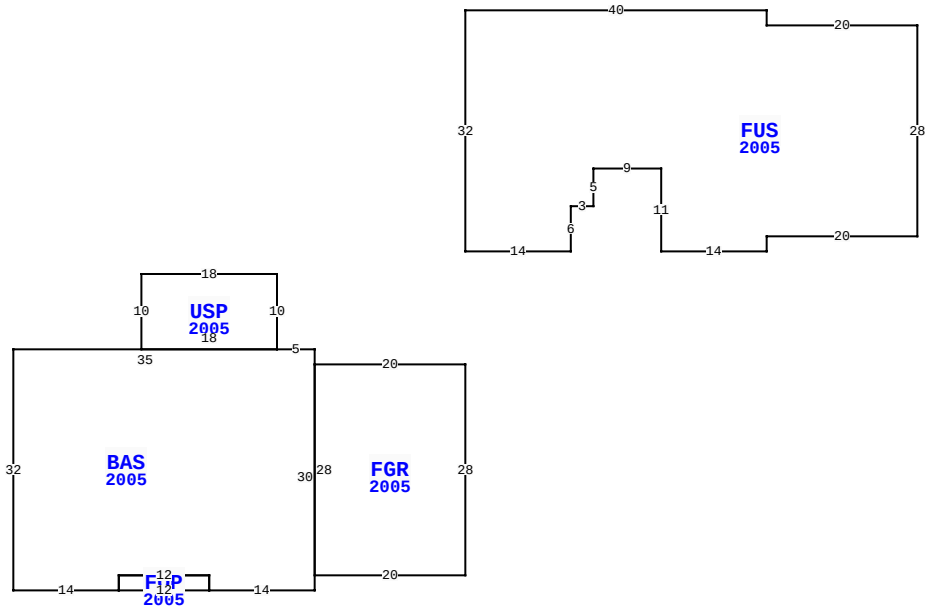

76070 HARLEY CT, YULEE

BLD DATE		LGL DATE	
XF DATE		LAND DATE	
INC DATE		AG DATE	

VALUATION SUMMARY

VALUATION BY	STANDARD
Tax Group: 4	Tax Dist:
BUILDING MARKET VALUE	192,046
TOTAL MARKET OB/XF VALUE	4,148
TOTAL LAND VALUE - MARKET	55,000
TOTAL MARKET VALUE	251,194
SOH/AGL Deduction	27,356
ASSESSED VALUE	223,838
TOTAL EXEMPTION VALUE	0
BASE TAXABLE VALUE	223,838
TOTAL JUST VALUE	251,194
NCON VALUE	0
INCOME VALUE	
PREVIOUS YEAR MKT VALUE	212,767

PERMIT NUM	DESCRIPTION	AMT	ISSUED
B13670	NEW CONSTR	0	12/01/2004

SALES DATA

OFF RECORD Number	DATE	TYPE INST	Q / U	V / I	RSN CD	SALE PRICE
1843/0797	10/30/2012	WD	Q	I	02	139,300
GRANTOR: HSBC BANK USA NATIONA						
GRANTEE: BEVERLY JUSTIN						
1798/0553	6/18/2012	CT	U	I	18	100
GRANTOR: CLERK OF COURT						
GRANTEE: HSBC BANK USA NA TR						

BUILDING NOTES

BUILDING DIMENSIONS

FGR=[YR=2005] W20 BAS=[YR=2005] N2 W5 USP=[YR=2005] N10 W18 S10 E18$ W35 S32 E14 FOP=[YR=2005] E12 N2 W12 S2$ N2 E12 S2 E14 N30$ S28 E20 N28 $ PTR=N15 FUS=[YR=2005] N32 E40 S2 E20 S28 W20 S2 W14 N11 W9 S5 W3 S6 W14$ S15$.

EXTRA FEATURES

LN	OB/XF CODE	DESCRIPTION	BLD	CAP	L	W	UNITS	UT	Adj R	ADJ UNIT PRICE	ORIG COND	YEAR ON	YEAR ACTUAL	Q	% COND	OB/XF MKT VALUE	NOTES
1	0812	CONCRETE C	0	0	0	0	1,192.00	SF	4.00	4.00	100	2005	2005	3	87	4,148	

LAND DESCRIPTION

TOTAL OB/XF 4,148

LN	USE CODE	CLS	LAND USE DESCRIPTION	CAP	RD	LOC ZONE	FRONT	DEPTH	TOT LND UTS	UNIT TYPE	DT	DPTH FACT	% COND	TOT ADJ	UNIT PRICE	ADJ UNIT PRICE	LAND VALUE	OTHER ADJUSTMENTS AND NOTES	YEAR	DENSITY	DECL	FRZ	YR	CONSRV
1	000134	C	SFR POND	0	0003	PUD	0.00	0.00	1.00	LT		1.00	1.00	1.00	55,000.00	55,000.00	55,000							

REVIEW DATE 08/09/2022 BY KBA Total Acres: 0.00 Total Land Value: 55,000 Market: 0 Agricultural: 0 Common: 55,000 PRINTED 08/02/2023 BY SYS