LOT 26
TIMBER CREEK PLANTATION #1
PB 6/394

BOERCKEL DENNIS M/NICHOLSON DANIEL ET AL
76086 TIDEVIEW LN
YULEE, FL 32041

2023

11-2N-26-2050-0026-0000

BUILDING CHARACTERISTICS

ELEMENT	CD	CONSTRUCTION
Exterior Wall	16	WD FR STUC 100
Roof Structur	03	GABLE/HIP 100
Roof Cover	03	COMP SHNGL 100
Interior Wall	05	DRYWALL 100
Interior Floo	14	CARPET 70
Interior Floo	11	CLAY TILE 30
Air Condition	03	CENTRAL 100
Heating Type	04	AIR DUCTED 100
Bedrooms		5 100
Bathrooms		3.5 100
Frame	02	WOOD FRAME 100
Stories	2.	2. 100
Units		0 100
Occupancy	00	NONE 100
Quality	03	Quality Level 03
DOR CODE	0100	SINGLE FAMILY
MAP NUM		MKT AREA 05
NEIGHBORHOOD/LOC	5005.00	

AREA TYPE	TOTAL GROSS AREA	PCT OF BASE	TOT ADJ AREA	SUBAREA MARKET VALUE
BAS	1,708	100	1,708	139,647
FEP	200	80	160	13,081
FGR	713	55	392	32,050
FOP	108	30	32	2,616
FUS	1,756	100	1,756	143,572
TOTALS	4,485		4,048	330,966

MARKET ADJUSTMENTS

TYPE	MDL	EFF. AREA	TOT ADJ PTS	EFF. BASE RATE	REPL. COST NEW	AYB	EYB	ECON	FNCT		NORM	% COND
0100	01	4,048	98.4720	88.87	359,746	2006	2006	0	0	0	8.00	92.00

1 SINGLE FAM – 100% - 2007 Heated Area: 3464 HX Base Yr 2007

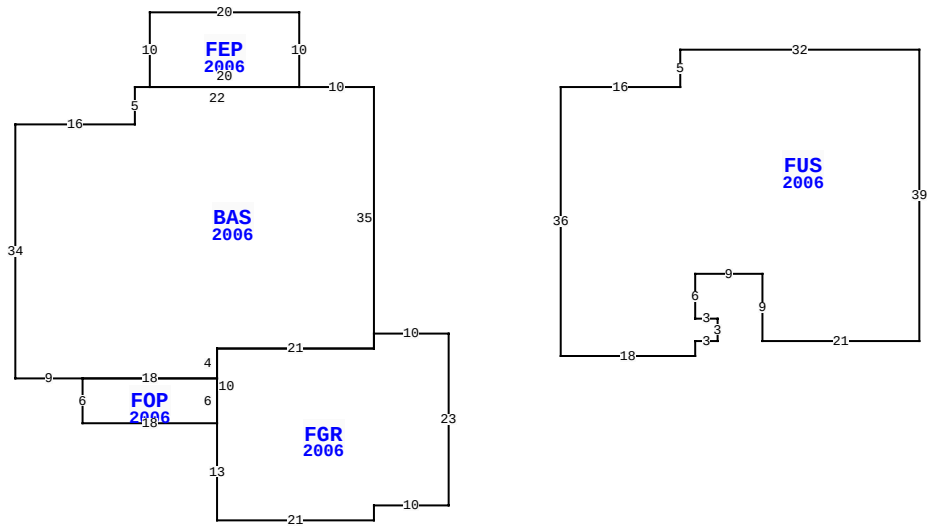

76086 TIDEVIEW LN, YULEE

BLD DATE		LGL DATE	
XF DATE		LAND DATE	
INC DATE		AG DATE	

NASSAU COUNTY PROPERTY

PAGE 1 of 1 4

VALUATION SUMMARY

VALUATION BY		STANDARD
Tax Group: 4	Tax Dist:	
BUILDING MARKET VALUE		330,966
TOTAL MARKET OB/XF VALUE		37,506
TOTAL LAND VALUE - MARKET		55,000
TOTAL MARKET VALUE		423,472
SOH/AGL Deduction		218,113
ASSESSED VALUE		205,359
TOTAL EXEMPTION VALUE	HX HB WR	55,000
BASE TAXABLE VALUE		150,359
TOTAL JUST VALUE		423,472
NCON VALUE		0
INCOME VALUE		
PREVIOUS YEAR MKT VALUE		352,386

PERMIT NUM	DESCRIPTION	AMT	ISSUED
21014941	REPAIR/RRF	24,750	10/29/2021
B0922729	SWIM POOL	25,500	08/04/2009
E16386	ELEC OTHER	1,500	12/01/2005
M10744	MECH OTHER	0	12/01/2005
P10148	OTHER	0	10/01/2005
C16037	CO ISSUED	184,296	09/01/2005

SALES DATA

OFF RECORD Number	DATE	TYPE INST	Q / U	V / I	RSN CD	SALE PRICE
2480/0284	7/12/2021	QC	U	I	11	100
GRANTOR: BOERCKEL DENNIS M & D						
GRANTEE: BOERCKEL DENNIS M &						
1401/1244	4/05/2006	WD	Q	I		323,000
GRANTOR: KB HOME JACKSONVILLE						
GRANTEE: BOERCKEL DENNIS M &						

BUILDING NOTES

BUILDING DIMENSIONS

BAS=[YR=2006] W10 FEP=[YR=2006] N10 W20 S10 E20$ W22 S5 W16 S34 E9 FOP=[YR=2006] S6 E18 FGR=[YR=2006] S13 E21 N2 E10 N23 W10 S2 W21 S10$ N6 W18$ E18 N4 E21 N35$ PTR=E25 FUS=[YR=2006] E16 N5 E32 S39 W21 N9 W9 S6 E3 S3 W3 S2 W18 N36$ W25 $.

EXTRA FEATURES

LN	OB/XF CODE	DESCRIPTION	BLD	CAP	L	W	UNITS	UT	Adj R	ADJ UNIT PRICE	ORIG COND	YEAR ON	YEAR ACTUAL	Q	% COND	OB/XF MKT VALUE	NOTES
1	0812	CONCRETE C	0	100	0	0	1,421.00	SF	4.00	4.00	100	2006	2006	3	88	5,002	
2	0861	POOL GUNIT	0	100	0	0	377.00	SF	85.00	85.00	100	2009	2009	3	60	19,227	
3	0855	CONC PAVER	0	100	0	0	1,459.00	SF	10.00	10.00	100	2009	2009	3	91	13,277	

LAND DESCRIPTION

TOTAL OB/XF 37,506

LN	USE CODE	CLS	LAND USE DESCRIPTION	CAP	RD	LOC ZONE	FRONT	DEPTH	TOT LND UTS	UNIT TYPE	DT	DPTH FACT	% COND	TOT ADJ	UNIT PRICE	ADJ UNIT PRICE	LAND VALUE	OTHER ADJUSTMENTS AND NOTES	YEAR	DENSITY	DECL	FRZ	YR	CONSRV
1	000100	C	SFR	100	0003	PUD	0.00	0.00	1.00	LT		1.00	1.00	1.00	55,000.00	55,000.00	55,000							

REVIEW DATE 02/01/2022 BY KBA Total Acres: 0.00 Total Land Value: 55,000 Market: 0 Agricultural: 0 Common: 55,000 PRINTED 08/02/2023 BY SYS