LOT 25
TIMBER CREEK PLANTATION #1
PB 6/394

MCCOY NIKKI & JASON
76102 TIDEVIEW LN
YULEE, FL 32097

2023

11-2N-26-2050-0025-0000

NASSAU COUNTY PROPERTY

BUILDING CHARACTERISTICS

ELEMENT	CD	CONSTRUCTION
Exterior Wall	16	WD FR STUC 100
Roof Structur	03	GABLE/HIP 100
Roof Cover	03	COMP SHNGL 100
Interior Wall	05	DRYWALL 100
Interior Floo	11	CLAY TILE 50
Interior Floo	14	CARPET 50
Air Condition	03	CENTRAL 100
Heating Type	04	AIR DUCTED 100
Bedrooms		4 100
Bathrooms		3 100
Frame	02	WOOD FRAME 100
Stories	2.	2. 100
Units		0 100
Occupancy	00	NONE 100
Quality	03	Quality Level 03

DOR CODE 0100 SINGLE FAMILY
MAP NUM | MKT AREA 05
NEIGHBORHOOD/LOC 5005.00

AREA TYPE	TOTAL GROSS AREA	PCT OF BASE	TOT ADJ AREA	SUBAREA MARKET VALUE
BAS	1,182	100	1,182	107,126
FGR	477	55	262	23,746
FOP	27	30	8	725
FUS	1,428	100	1,428	129,421
STP	9	10	1	91
UOP	60	20	12	1,088
USP	200	30	60	5,438
TOTALS	3,383		2,953	267,635

MARKET ADJUSTMENTS

TYPE	MDL	EFF. AREA	TOT ADJ PTS	EFF. BASE RATE	REPL. COST NEW	AYB	EYB	ECON	FNCT		NORM	% COND
0100	01	2,953	108.5700	97.98	289,335	2005	2007	0	0	0	7.50	92.50

1 SINGLE FAM – 100% - 2023 Heated Area: 2610 HX Base Yr 2023

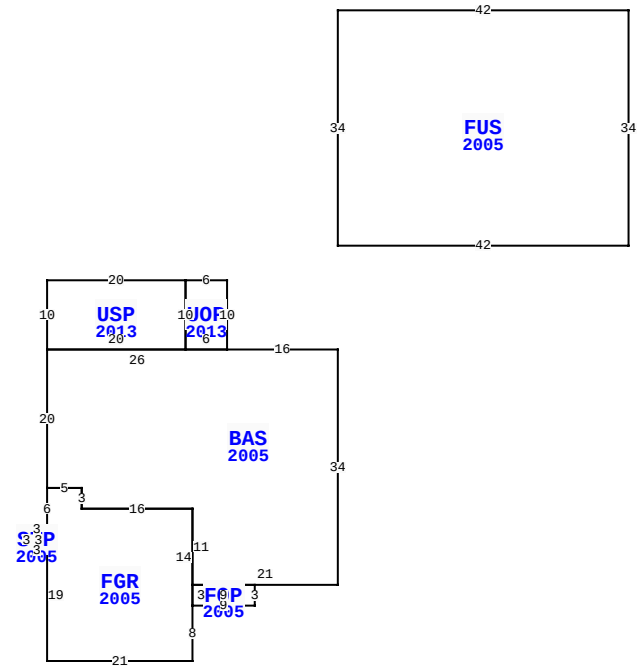

76102 TIDEVIEW LN, YULEE

BLD DATE		LGL DATE	
XF DATE		LAND DATE	
INC DATE		AG DATE	

VALUATION SUMMARY

VALUATION BY		STANDARD
Tax Group: 4	Tax Dist:	
BUILDING MARKET VALUE		267,635
TOTAL MARKET OB/XF VALUE		40,871
TOTAL LAND VALUE - MARKET		55,000
TOTAL MARKET VALUE		363,506
SOH/AGL Deduction		0
ASSESSED VALUE		363,506
TOTAL EXEMPTION VALUE	HX HB	50,000
BASE TAXABLE VALUE		313,506
TOTAL JUST VALUE		363,506
NCON VALUE		0
INCOME VALUE		
PREVIOUS YEAR MKT VALUE		287,403

PERMIT NUM	DESCRIPTION	AMT	ISSUED
R2293185	REPAIR/RRF	18,307	10/01/2022
B1327135	SWIM POOL	28,919	04/01/2013
E15419	ELEC OTHER	1,500	08/01/2005
M10237	MECH OTHER	0	08/01/2005
R0507586	REPAIR/RRF	2,000	05/01/2005
B0515162	NEW CONSTR	185,587	05/01/2005

SALES DATA

OFF RECORD Number	DATE	TYPE INST	Q U	V I	RSN CD	SALE PRICE
2599/0490	10/12/2022	WD	Q	I	01	450,000
GRANTOR: BROWN JOSHUA & REBECC						
GRANTEE: MCCOY NIKKI & JASON						
2157/0752	11/10/2017	WD	Q	I	01	264,900
GRANTOR: STARNES ROBERT B &						
GRANTEE: BROWN JOSHUA & REBE						

BUILDING NOTES

BUILDING DIMENSIONS

BAS=[YR=2005] W16 UOP=[YR=2013] N10 W6 USP=[YR=2013] W20 S10 E20 N10$ S10 E6$ W26S20 FGR=[YR=2005] S6 STP=[YR=2005] W3 S3 E3 N3$ S19 E21 N8 FOP=[YR=2005] E9 N3 W9 S3$ N14 W16 N3 W5$ E5 S3 E16 S11 E21 N34$ PTR=N15 FUS=[YR=2005] N34 E42 S34 W42$ S15$.

EXTRA FEATURES

LN	OB/XF CODE	DESCRIPTION	BLD	CAP	L	W	UNITS	UT	Adj R	ADJ UNIT PRICE	ORIG COND	YEAR ON	YEAR ACTUAL	Q	% COND	OB/XF MKT VALUE	NOTES
1	0811	CONCRETE B	0	100	0	0	830.00	SF	5.20	5.20	100	2005	2005	3	87	3,755	
2	0845	KOOL DECK	0	100	0	0	946.00	SF	7.25	7.25	100	2013	2013	3	95	6,516	
3	0861	POOL GUNIT	0	100	0	0	480.00	SF	85.00	85.00	100	2013	2013	3	75	30,600	

LAND DESCRIPTION

TOTAL OB/XF 40,871

LN	USE CODE	CLS	LAND USE DESCRIPTION	CAP	RD	LOC ZONE	FRONT	DEPTH	TOT LND UTS	UNIT TYPE	DT	DPTH FACT	% COND	TOT ADJ	UNIT PRICE	ADJ UNIT PRICE	LAND VALUE	OTHER ADJUSTMENTS AND NOTES	YEAR	DENSITY	DECL	FRZ	YR	CONSRV
1	000100	C	SFR	100	0003	PUD	0.00	0.00	1.00	LT		1.00	1.00	1.00	55,000.00	55,000.00	55,000							

REVIEW DATE 01/30/2018 BY KBX Total Acres: 0.00 Total Land Value: 55,000 Market: 0 Agricultural: 0 Common: 55,000 PRINTED 08/02/2023 BY SYS