LOT 132
IN OR 2210/415
PT OR 2008/816

MCMILLAN AMANUEL S & MARNA S
75060 FERN CREEK DRIVE
YULEE, FL 32097

2023

11-2N-26-1830-0132-0000

NASSAU COUNTY PROPERTY

BUILDING CHARACTERISTICS

ELEMENT	CD	CONSTRUCTION
Exterior Wall	10	ABOVE AVG 80
Exterior Wall	16	WD FR STUC 20
Roof Structur	03	GABLE/HIP 100
Roof Cover	03	COMP SHNGL 100
Interior Wall	05	DRYWALL 100
Interior Floo	11	CLAY TILE 50
Interior Floo	14	CARPET 50
Air Condition	03	CENTRAL 100
Heating Type	04	AIR DUCTED 100
Bedrooms		4 100
Bathrooms		3.5 100
Frame	02	WOOD FRAME 100
Stories	2.	2. 100
Units		0 100
Occupancy	00	NONE 100
Quality	03	Quality Level 03

DOR CODE	0100	SINGLE FAMILY	
MAP NUM		MKT AREA	05
NEIGHBORHOOD/LOC	5009.00		

AREA TYPE	TOTAL GROSS AREA	PCT OF BASE	TOT ADJ AREA	SUBAREA MARKET VALUE
BAS	2,808	100	2,808	255,660
FGR	622	55	342	31,138
FOP	60	30	18	1,639
FOP	190	30	57	5,190
FUS	452	100	452	41,153
PTO	300	5	15	1,366
STR	52	10	5	455
TOTALS	4,484		3,697	336,601

MARKET ADJUSTMENTS

TYPE	MDL	EFF. AREA	TOT ADJ PTS	EFF. BASE RATE	REPL. COST NEW	AYB	EYB	ECON	FNCT		NORM	% COND
0100	01	3,697	103.0500	93.00	343,821	2017	2017	0	0	0	2.10	97.90

1 SINGLE FAM – 100% - 2019 Heated Area: 3260 HX Base Yr 2019

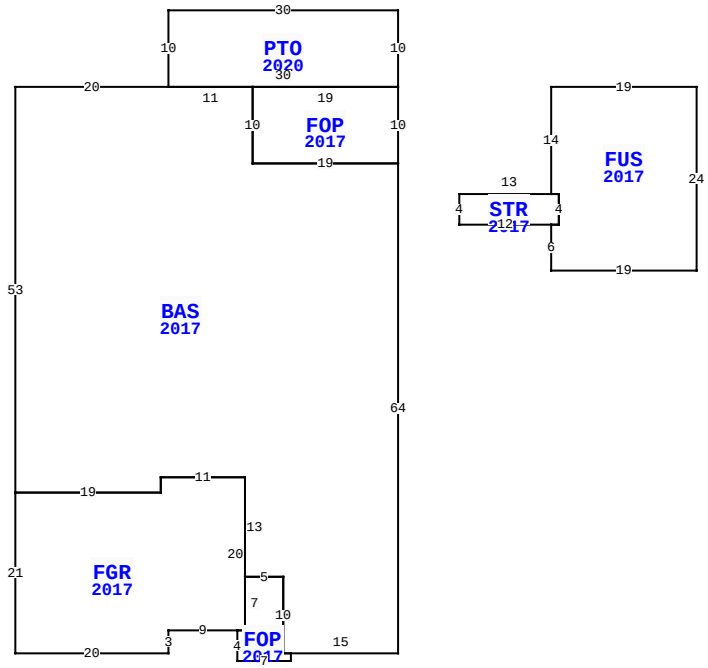

75060 FERN CREEK DR, YULEE

BLD DATE		LGL DATE	
XF DATE		LAND DATE	
INC DATE		AG DATE	

VALUATION SUMMARY

VALUATION BY		STANDARD
Tax Group: 4	Tax Dist:	
BUILDING MARKET VALUE		336,601
TOTAL MARKET OB/XF VALUE		6,043
TOTAL LAND VALUE - MARKET		55,000
TOTAL MARKET VALUE		397,644
SOH/AGL Deduction		100,399
ASSESSED VALUE		297,245
TOTAL EXEMPTION VALUE	HX HB	50,000
BASE TAXABLE VALUE		247,245
TOTAL JUST VALUE		397,644
NCON VALUE		0
INCOME VALUE		
PREVIOUS YEAR MKT VALUE		339,097

PERMIT NUM	DESCRIPTION	AMT	ISSUED
17002739	CO ISSUED	0	03/31/2017
B1633115	NEW CONSTR	403,622	09/01/2016

SALES DATA

OFF RECORD Number	DATE	TYPE INST	Q U	V I	RSN CD	SALE PRICE
2210/0415	7/11/2018	WD	Q	I	02	320,000
GRANTOR: WANG SING YOUR & EUGE						
GRANTEE: MCMILLAN AMANUEL S						
2111/0826	3/31/2017	SW	Q	I	02	304,285
GRANTOR: D R HORTON INC JACKSO						
GRANTEE: WANG SING YOUR & EU						

BUILDING NOTES

BUILDING DIMENSIONS

PTO=[YR=2020] N10 W30 S10 BAS=[YR=2017] W20 S53
FGR=[YR=2017] S21 E20 N3 E9 FOP=[YR=2017] S4 E7 N1 W1 N10 W5 S7 W1$ E1 N20 W11 S2 W19$ E19 N2 E11 S13E5 S10 E15 N64
FOP=[YR=2017] N10 W19 S10 E19$ W19 N10 W11$ E30$PTR=E20
FUS=[YR=2017] E19 S24 W19 N6STR=[YR=2017] W12 N4 E13 S4 W1 $ E1 N4 W1 N14$ W20$.

EXTRA FEATURES

LN	OB/XF CODE	DESCRIPTION	BLD	CAP	L	W	UNITS	UT	Adj R	ADJ UNIT PRICE	ORIG COND	YEAR ON	YEAR ACTUAL	Q	% COND	OB/XF MKT VALUE	NOTES
1	0811	CONCRETE B	0	100	0	0	1,198.00	SF	5.20	5.20	100	2017	2017	3	97	6,043	

LAND DESCRIPTION

TOTAL OB/XF 6,043

LN	USE CODE	CLS	LAND USE DESCRIPTION	CAP	RD	LOC ZONE	FRONT	DEPTH	TOT LND UTS	UNIT TYPE	DT	DPTH FACT	% COND	TOT ADJ	UNIT PRICE	ADJ UNIT PRICE	LAND VALUE	OTHER ADJUSTMENTS AND NOTES	YEAR	DENSITY	DECL	FRZ	YR	CONSRV
1	000133	C	SFR LAKE	100			0.00	0.00	1.00	UT		1.00	1.00	1.00	55,000.00	55,000.00	55,000							

REVIEW DATE 08/02/2022 BY KBA Total Acres: 0.00 Total Land Value: 55,000 Market: 0 Agricultural: 0 Common: 55,000 PRINTED 08/02/2023 BY SYS