LOT 60
RIVER GLEN #1 PB 7/263

KOPACH DEBORA LEE & HAROLD JR
75032 MORNING GLEN CT
YULEE, FL 32097

2023

11-2N-26-1830-0060-0000

BUILDING CHARACTERISTICS

ELEMENT	CD	CONSTRUCTION
Exterior Wall	16	WD FR STUC 90
Exterior Wall	21	STONE 10
Roof Structur	03	GABLE/HIP 100
Roof Cover	03	COMP SHNGL 100
Interior Wall	05	DRYWALL 100
Interior Floo	14	CARPET 70
Interior Floo	11	CLAY TILE 30
Air Condition	03	CENTRAL 100
Heating Type	04	AIR DUCTED 100
Bedrooms		3 100
Bathrooms		3 100
Frame	02	WOOD FRAME 100
Stories	2.	2. 100
Units		0 100
Occupancy	00	NONE 100
Quality	03	Quality Level 03
DOR CODE	0100	SINGLE FAMILY
MAP NUM		MKT AREA 05
NEIGHBORHOOD/LOC	5009.00	

AREA TYPE	TOTAL GROSS AREA	PCT OF BASE	TOT ADJ AREA	SUBAREA MARKET VALUE
BAS	1,165	100	1,165	111,563
FGR	412	55	227	21,738
FOP	123	30	37	3,544
FOP	130	30	39	3,734
FUS	913	100	913	87,431
TOTALS	2,743		2,381	228,011

MARKET ADJUSTMENTS

TYPE	MDL	EFF. AREA	TOT ADJ PTS	EFF. BASE RATE	REPL. COST NEW	AYB	EYB	ECON	FNCT		NORM	% COND
0100	01	2,381	113.4840	102.42	243,862	2009	2009	0	0	0	6.50	93.50

1 SINGLE FAM – 100% - 2022 Heated Area: 2078 HX Base Yr 2022

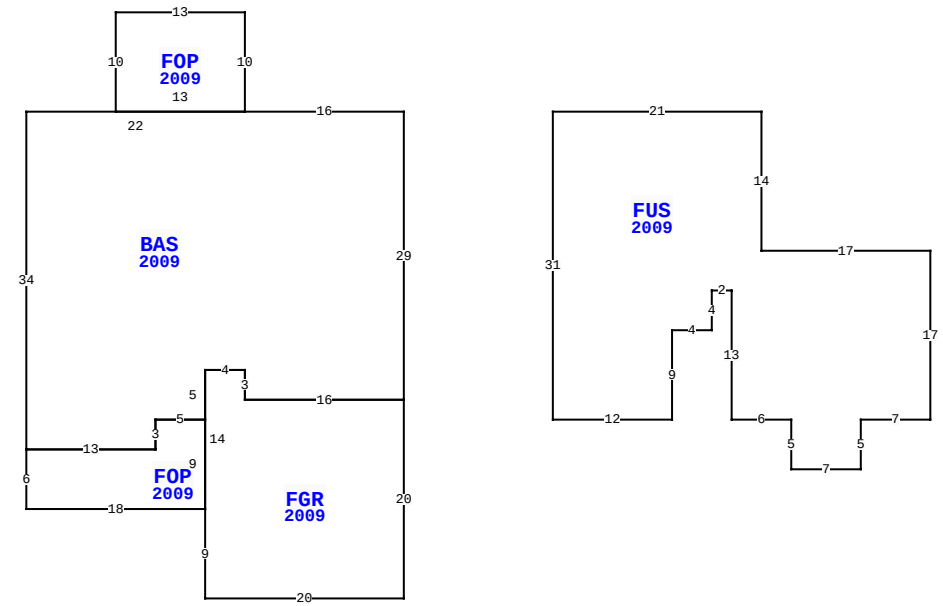

75032 MORNING GLEN CT, YULEE

BLD DATE	01/26/2010	KK	LGL DATE
XF DATE	01/26/2010	KK	LAND DATE
INC DATE			AG DATE

NASSAU COUNTY PROPERTY

PAGE 1 of 1 4

VALUATION SUMMARY

VALUATION BY		STANDARD
Tax Group: 4	Tax Dist:	
BUILDING MARKET VALUE		228,011
TOTAL MARKET OB/XF VALUE		7,625
TOTAL LAND VALUE - MARKET		55,000
TOTAL MARKET VALUE		290,636
SOH/AGL Deduction		101,441
ASSESSED VALUE		189,195
TOTAL EXEMPTION VALUE	HX HB	50,000
BASE TAXABLE VALUE		139,195
TOTAL JUST VALUE		290,636
NCON VALUE		0
INCOME VALUE		
PREVIOUS YEAR MKT VALUE		249,166

PERMIT NUM	DESCRIPTION	AMT	ISSUED
C22316	CO ISSUED	0	05/14/2009
E21682	ELEC OTHER	3,943	03/01/2009
M14428	MECH OTHER	0	03/01/2009
P13682	OTHER	0	03/01/2009
R11773	REPAIR/RRF	5,000	03/01/2009
B22316	NEW CONSTR	175,362	03/01/2009

SALES DATA

OFF RECORD Number	DATE	TYPE INST	Q / U	V / I	RSN CD	SALE PRICE
2357/0699	4/27/2020	WD	Q	I	02	275,000
GRANTOR: HAMILTON IRENE & RONA						
GRANTEE: KOPACH DEBORA LEE &						
2146/1402	9/18/2017	WD	Q	I	01	230,000
GRANTOR: NOBLE CHRISTOPHER ALL						
GRANTEE: HAMILTON IRENE						

BUILDING NOTES

BUILDING DIMENSIONS

BAS=[YR=2009] W16 FOP=[YR=2009] N10 W13 S10 E13$ W22 S34 FOP=[YR=2009] S6 E18 FGR=[YR=2009] S9 E20 N20 W16 N3 W4 S14$ N9 W5 S3 W13$ E13 N3 E5 N5 E4 S3 E16 N29$ PTR=E15 FUS=[YR=2009] E21 S14 E17 S17 W7 S5 W7 N5 W6 N13 W2 S4 W4 S9 W12 N31$ W15$.

EXTRA FEATURES

LN	OB/XF CODE	DESCRIPTION	BLD	CAP	L	W	UNITS	UT	Adj R	ADJ UNIT PRICE	ORIG COND	YEAR ON	YEAR ACTUAL	Q	% COND	OB/XF MKT VALUE	NOTES
1	0811	CONCRETE B	0	100	0	0	982.00	SF	5.20	5.20	100	2009	2009	3	91	4,647	
2	0810	CONCRETE A	0	100	17	3	51.00	SF	6.50	6.50	100	2009	2009	3	91	302	
3	0462	ST/AL FNC	0	100	0	0	446.00	SF	10.00	10.00	100	2009	2009	3	60	2,676	

LAND DESCRIPTION

TOTAL OB/XF 7,625

LN	USE CODE	CLS	LAND USE DESCRIPTION	CAP	RD	LOC ZONE	FRONT	DEPTH	TOT LND UTS	UNIT TYPE	DT	DPTH FACT	% COND	TOT ADJ	UNIT PRICE	ADJ UNIT PRICE	LAND VALUE	OTHER ADJUSTMENTS AND NOTES	YEAR	DENSITY	DECL	FRZ	YR	CONSRV
1	000133	C	SFR LAKE	100	0003		0.00	0.00	1.00	UT		1.00	1.00	1.00	55,000.00	55,000.00	55,000							

REVIEW DATE 08/16/2018 BY KBX Total Acres: 0.00 Total Land Value: 55,000 Market: 0 Agricultural: 0 Common: 55,000 PRINTED 08/02/2023 BY SYS