LOT 11
IN OR 1877/149
RIVER GLEN #1 PB 7/263

WOOD JAMES E & RACHEL B
146 PLANTATION RD
GRAY, GA 31032

2023

11-2N-26-1830-0011-0000

NASSAU COUNTY PROPERTY

BUILDING CHARACTERISTICS

ELEMENT	CD	CONSTRUCTION
Exterior Wall	16	WD FR STUC 90
Exterior Wall	21	STONE 10
Roof Structur	03	GABLE/HIP 100
Roof Cover	03	COMP SHNGL 100
Interior Wall	05	DRYWALL 100
Interior Floo	14	CARPET 70
Interior Floo	11	CLAY TILE 30
Air Condition	03	CENTRAL 100
Heating Type	04	AIR DUCTED 100
Bedrooms		4 100
Bathrooms		2.5 100
Frame	02	WOOD FRAME 100
Stories	2.	2. 100
Units		0 100
Occupancy	00	NONE 100
Quality	03	Quality Level 03
DOR CODE	0100	SINGLE FAMILY
MAP NUM		MKT AREA 05
NEIGHBORHOOD/LOC	5009.00	

AREA TYPE	TOTAL GROSS AREA	PCT OF BASE	TOT ADJ AREA	SUBAREA MARKET VALUE
BAS	1,721	100	1,721	155,861
FGR	468	55	257	23,275
FOP	20	30	6	543
FOP	100	30	30	2,717
FST	15	55	8	725
FUS	798	100	798	72,270
PTO	100	5	5	453
TOTALS	3,222		2,825	255,844

MARKET ADJUSTMENTS

TYPE	MDL	EFF. AREA	TOT ADJ PTS	EFF. BASE RATE	REPL. COST NEW	AYB	EYB	ECON	FNCT		NORM	% COND
0100	01	2,825	107.3280	96.86	273,630	2009	2009	0	0	0	6.50	93.50

1 SINGLE FAM – 0% - 0 Heated Area: 2519 HX Base Yr

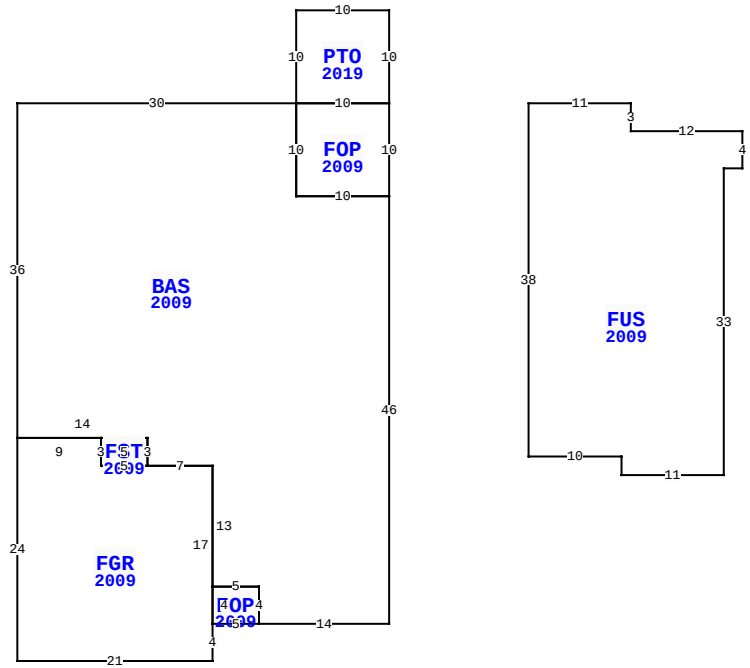

65051 RIVER GLEN PKWY, YULEE

BLD DATE	01/11/2010 KK	LGL DATE	
XF DATE	01/11/2010 KK	LAND DATE	
INC DATE		AG DATE	

VALUATION SUMMARY

VALUATION BY	STANDARD
Tax Group: 4	Tax Dist:
BUILDING MARKET VALUE	255,844
TOTAL MARKET OB/XF VALUE	3,089
TOTAL LAND VALUE - MARKET	55,000
TOTAL MARKET VALUE	313,933
SOH/AGL Deduction	24,555
ASSESSED VALUE	289,378
TOTAL EXEMPTION VALUE	0
BASE TAXABLE VALUE	289,378
TOTAL JUST VALUE	313,933
NCON VALUE	0
INCOME VALUE	
PREVIOUS YEAR MKT VALUE	268,013

PERMIT NUM	DESCRIPTION	AMT	ISSUED
C22315	CO ISSUED	0	05/14/2009
E21681	ELEC OTHER	5,206	03/01/2009
M14427	MECH OTHER	0	03/01/2009
P13683	OTHER	0	03/01/2009
R11772	REPAIR/RRF	5,000	03/01/2009
B22315	NEW CONSTR	203,610	03/01/2009

SALES DATA

OFF RECORD Number	DATE	TYPE INST	Q / U	V / I	RSN CD	SALE PRICE
1877/0149	6/19/2013	WD	U	I	11	100
GRANTOR: GRAHAM AMY RUTH & DAM						
GRANTEE: WOOD JAMES E & RACH						
1863/1098	6/19/2013	WD	Q	I	02	146,000
GRANTOR: GRAHAM AMY RUTH & DAM						
GRANTEE: WOOD JAMES E & RACH						

BUILDING NOTES

EXTRA FEATURES

LN	OB/XF CODE	DESCRIPTION	BLD	CAP	L	W	UNITS	UT	Adj R	ADJ UNIT PRICE	ORIG COND	YEAR ON	YEAR ACTUAL	Q	% COND	OB/XF MKT VALUE	NOTES
1	0811	CONCRETE B	0	0	0	0	604.00	SF	5.20	5.20	100	2009	2009	3	91	2,858	
2	0810	CONCRETE A	0	0	13	3	39.00	SF	6.50	6.50	100	2009	2009	3	91	231	

BUILDING DIMENSIONS

BAS=[YR=2009;ORIG=-10,0] W30 S36 E14 S3 E7 S13 E5 S4 E14 N46 W10 N10 $
FUS=[YR=2009;ORIG=15,0] E11 S3 E12 S4 W2 S33 W11 N2 W10 N38 $
FGR=[YR=2009;ORIG=-40,36] S24 E21 N4 N17 W7 W5 N3 W9 $
FOP=[YR=2009;ORIG=0,0] W10 S10 E10 N10 $
PTO=[YR=2019;ORIG=0,0] N10 W10 S10 E10 $
FOP=[YR=2009;ORIG=-19,56] E5 N4 W5 S4 $
FST=[YR=2009;ORIG=-26,39] N3 W5 S3 E5 $
PTR=[ORIG=0,0] E15 W15 $
.

LAND DESCRIPTION

TOTAL OB/XF 3,089

LN	USE CODE	CLS	LAND USE DESCRIPTION	CAP	RD	LOC ZONE	FRONT	DEPTH	TOT LND UTS	UNIT TYPE	DT	DPTH FACT	% COND	TOT ADJ	UNIT PRICE	ADJ UNIT PRICE	LAND VALUE	OTHER ADJUSTMENTS AND NOTES	YEAR	DENSITY	DECL	FRZ	YR	CONSRV
1	000100	C	SFR	0			0.00	0.00	1.00	UT		1.00	1.00	1.00	55,000.00	55,000.00	55,000							

REVIEW DATE 04/28/2020 BY KBA Total Acres: 0.00 Total Land Value: 55,000 Market: 0 Agricultural: 0 Common: 55,000 PRINTED 08/02/2023 BY SYS