LOT 4
IN OR 2063/736
RIVER GLEN #1 PB 7/263

GRANILLO CARLOS RUBEN VELOZ/VELOZ LINDSAY
65033 RIVER GLEN PKWY
YULEE, FL 32097

2023

11-2N-26-1830-0004-0000

BUILDING CHARACTERISTICS

ELEMENT	CD	CONSTRUCTION
Exterior Wall	10	ABOVE AVG 100
Roof Structur	08	IRREGULAR 100
Roof Cover	03	COMP SHNGL 100
Interior Wall	05	DRYWALL 100
Interior Floo	11	CLAY TILE 50
Interior Floo	14	CARPET 50
Air Condition	03	CENTRAL 100
Heating Type	04	AIR DUCTED 100
Bedrooms		5 100
Bathrooms		4 100
Frame	02	WOOD FRAME 100
Stories	2.	2. 100
Units		0 100
Occupancy	00	NONE 100
Quality	03	Quality Level 03
DOR CODE	0100	SINGLE FAMILY
MAP NUM		MKT AREA 05
NEIGHBORHOOD/LOC	5009.00	

AREA TYPE	TOTAL GROSS AREA	PCT OF BASE	TOT ADJ AREA	SUBAREA MARKET VALUE
BAS	2,468	100	2,468	236,756
FGR	622	55	342	32,808
FOP	65	30	20	1,919
FOP	224	30	67	6,427
FUS	383	100	383	36,741
STR	52	10	5	480
TOTALS	3,814		3,285	315,131

MARKET ADJUSTMENTS

TYPE	MDL	EFF. AREA	TOT ADJ PTS	EFF. BASE RATE	REPL. COST NEW	AYB	EYB	ECON	FNCT		NORM	% COND
0100	01	3,285	109.0200	98.39	323,211	2016	2016	0	0	0	2.50	97.50

1 SINGLE FAM – 100% - 2017 Heated Area: 2851 HX Base Yr 2017

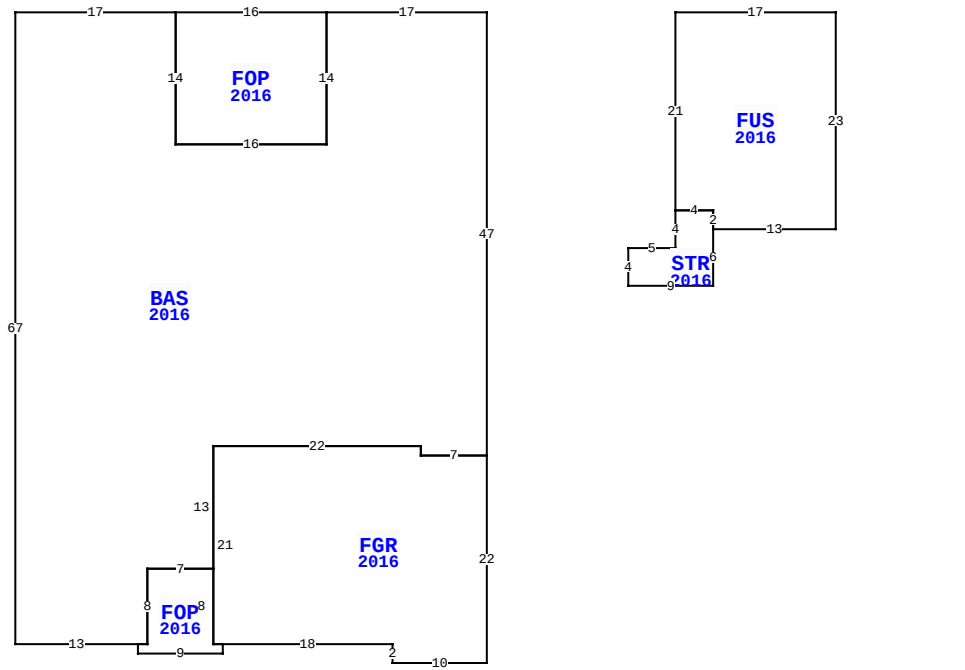

65033 RIVER GLEN PKWY, YULEE

BLD DATE		LGL DATE	
XF DATE		LAND DATE	
INC DATE		AG DATE	

NASSAU COUNTY PROPERTY

PAGE 1 of 1 4

VALUATION SUMMARY

VALUATION BY		STANDARD
Tax Group: 4	Tax Dist:	
BUILDING MARKET VALUE		315,131
TOTAL MARKET OB/XF VALUE		5,391
TOTAL LAND VALUE - MARKET		55,000
TOTAL MARKET VALUE		375,522
SOH/AGL Deduction		125,601
ASSESSED VALUE		249,921
TOTAL EXEMPTION VALUE	HX HB VX	55,000
BASE TAXABLE VALUE		194,921
TOTAL JUST VALUE		375,522
NCON VALUE		0
INCOME VALUE		
PREVIOUS YEAR MKT VALUE		320,506

PERMIT NUM	DESCRIPTION	AMT	ISSUED
B1631719	CO ISSUED	0	06/14/2016
B1631719	NEW CONSTR	357,662	02/01/2016

SALES DATA

OFF RECORD Number	DATE	TYPE INST	Q U /	V I /	RSN CD	SALE PRICE
2063/0736	8/02/2016	WD	Q	I	01	295,000
GRANTOR: DREAM FINDERS HOMES L						
GRANTEE: GRANILLO CARLOS RUB						
2016/0291	11/06/2015	SW	Q	V	05	180,000
GRANTOR: PROVIDENCE CONSTRUCTI						
GRANTEE: DREAM FINDERS HOMES						

BUILDING NOTES

BUILDING DIMENSIONS

BAS=[YR=2016] W17 FOP=[YR=2016] W16 S14 E16 N14$ S14 W16 N14 W17 S67 E13 FOP=[YR=2016] S1 E9 N1 FGR=[YR=2016] E18 S2 E10 N22 W7 N1 W22 S21 E1$ W1 N8 W7 S8 W1$ E1 N8 E7 N13 E22 S1 E7 N47$ PTR=E20 FUS=[YR=2016] E17 S23 W13 STR=[YR=2016] S6 W9 N4 E5 N4 E4 S2$ N2 W4 N21$ W20$.

EXTRA FEATURES

LN	OB/XF CODE	DESCRIPTION	BLD	CAP	L	W	UNITS	UT	Adj R	ADJ UNIT PRICE	ORIG COND	YEAR ON	YEAR ACTUAL	Q	% COND	OB/XF MKT VALUE	NOTES
3	0810	CONCRETE A	0	100	0	0	855.00	SF	6.50	6.50	100	2016	2016	3	97	5,391	

LAND DESCRIPTION

TOTAL OB/XF 5,391

LN	USE CODE	CLS	LAND USE DESCRIPTION	CAP	RD	LOC ZONE	FRONT	DEPTH	TOT LND UTS	UNIT TYPE	DT	DPTH FACT	% COND	TOT ADJ	UNIT PRICE	ADJ UNIT PRICE	LAND VALUE	OTHER ADJUSTMENTS AND NOTES	YEAR	DENSITY	DECL	FRZ	YR	CONSRV
1	000100	C	SFR	100			0.00	0.00	1.00	UT		1.00	1.00	1.00	55,000.00	55,000.00	55,000							

REVIEW DATE 05/10/2022 BY KBA Total Acres: 0.00 Total Land Value: 55,000 Market: 0 Agricultural: 0 Common: 55,000 PRINTED 08/02/2023 BY SYS