PT GOVT LOT 2 SEC 11-2N-23E
IN OR 2618/821
ESMT IN OR 2256/1713,

ELLIS PARKER & MAKENZIE/
4493 RUNAWAY COVE RD
HILLIARD, FL 32046

2023

11-2N-23-0000-0002-0000

BUILDING CHARACTERISTICS

ELEMENT	CD	CONSTRUCTION
Exterior Wall	05	AVERAGE 100
Roof Structur	03	GABLE/HIP 100
Roof Cover	12	MODULAR MT 100
Interior Wall	05	DRYWALL 100
Interior Floo	12	HARDWOOD 50
Interior Floo	14	CARPET 50
Air Condition	03	CENTRAL 100
Heating Type	04	AIR DUCTED 100
Bedrooms		2 100
Bathrooms		2 100
Frame	02	WOOD FRAME 100
Stories	2.	2. 100
Units		0 100
Occupancy	00	NONE 100
Quality	04	Quality Level 04
DOR CODE	5000	IMPROVED AG
MAP NUM		MKT AREA 09
NEIGHBORHOOD/LOC	9001.00	

AREA TYPE	TOTAL GROSS AREA	PCT OF BASE	TOT ADJ AREA	SUBAREA MARKET VALUE
BAL	112	15	17	1,489
BAS	1,232	100	1,232	107,918
FEP	416	80	333	29,169
FOP	130	30	39	3,416
FUS	694	100	694	60,792
STP	40	10	4	351
UCP	480	20	96	8,409
UOP	320	20	64	5,606
UST	96	45	43	3,767
TOTALS	3,520		2,522	220,917

MARKET ADJUSTMENTS

TYPE	MDL	EFF. AREA	TOT ADJ PTS	EFF. BASE RATE	REPL. COST NEW	AYB	EYB	ECON	FNCT		NORM	% COND
0100	01	2,522	109.3680	98.70	248,921	1999	1999	0	0	0	11.25	88.75

1 SINGLE FAM – 100% - 0 Heated Area: 1926 HX Base Yr

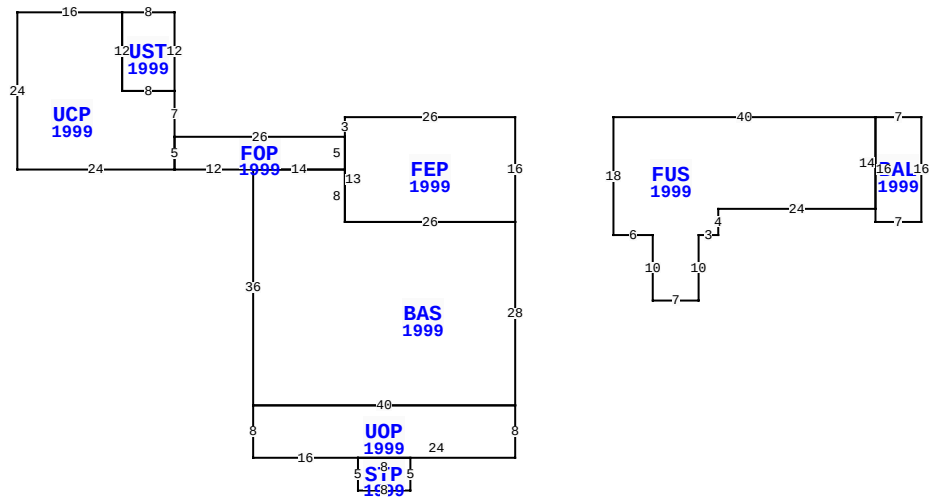

4493 RUNAWAY COVE RD, HILLIARD

BLD DATE		LGL DATE	
XF DATE		LAND DATE	06/15/2023 MLU
INC DATE		AG DATE	

NASSAU COUNTY PROPERTY

PAGE 1 of 1 6

VALUATION SUMMARY

VALUATION BY		STANDARD
Tax Group: 6	Tax Dist:	
BUILDING MARKET VALUE		220,917
TOTAL MARKET OB/XF VALUE		2,309
TOTAL LAND VALUE - MARKET		206,320
TOTAL MARKET VALUE		257,309
SOH/AGL Deduction		100,929
ASSESSED VALUE		156,380
TOTAL EXEMPTION VALUE	HX HB	50,000
BASE TAXABLE VALUE		106,380
TOTAL JUST VALUE		429,546
NCON VALUE		0
INCOME VALUE		
PREVIOUS YEAR MKT VALUE		239,860

PERMIT NUM	DESCRIPTION	AMT	ISSUED
B98	NEW CONSTR	91,340	11/01/1998
B974501	NEW CONSTR	91,340	12/01/1997

SALES DATA

OFF RECORD Number	DATE	TYPE INST	Q / U	V / I	RSN CD	SALE PRICE
2618/0821	2/08/2023	WD	U	I	11	100
GRANTOR: SMITH NOAH & DIANNE						
GRANTEE: ELLIS PARKER & MAKE						
2256/1713	2/21/2019	QC	U	I	11	100
GRANTOR: SMITH NOAH DAVID & HA						
GRANTEE: SMITH NOAH DAVID &						

BUILDING NOTES

BUILDING DIMENSIONS

FEP=[YR=1999] W26 S3 FOP=[YR=1999] W26 UCP=[YR=1999] N7
UST=[YR=1999] N12 W8 S12 E8 $ W8 N12 W16 S24 E24 N5 $ S5 E12
BAS=[YR=1999] S36 UOP=[YR=1999] S8 E16 STP=[YR=1999] S5 E8
N5 W8 $ E24 N8 W40 $ E40 N28 W26 N8 W14 $ E14 N5 $ S13 E26
N16 $ PTR= E15 FUS=[YR=1999] E40 BAL=[YR=1999] E7 S16 W7
N16$ S14 W24 S4 W3 S10 W7 N10 W6 N18 $ W15 $.

EXTRA FEATURES

LN	OB/XF CODE	DESCRIPTION	BLD	CAP	L	W	UNITS	UT	Adj R	ADJ UNIT PRICE	ORIG COND	YEAR ON	YEAR ACTUAL	Q	% COND	OB/XF MKT VALUE	NOTES
1	0504	FP-ELECTRI	0	100	0	0	1.00	UT	2,000.00	2,000.00	100	1999	1999	3	84	1,680	
3	0350	CARPORT WD	0	100	14	24	336.00	SF	9.36	9.36	100	1999	1999	3	20	629	

LAND DESCRIPTION

TOTAL OB/XF 2,309

LN	USE CODE	CLS	LAND USE DESCRIPTION	CAP	RD	LOC ZONE	FRONT	DEPTH	TOT LND UTS	UNIT TYPE	DT	DPTH FACT	% COND	TOT ADJ	UNIT PRICE	ADJ UNIT PRICE	LAND VALUE	OTHER ADJUSTMENTS AND NOTES	YEAR	DENSITY	DECL	FRZ	YR	CONSRV
1	005000	C	RURAL HOME	100		OR	0.00	0.00	1.00	AC		1.00	1.00	1.00	30,000.00	30,000.00	30,000							
2	006000	A	PAST1/HAY	0			0.00	0.00	9.28	AC		1.00	1.00	1.00	440.00	440.00	4,083							
3	009910	M	MKT.VAL.AG	0			0.00	0.00	9.28	AC		1.00	1.00	1.00	19,000.00	19,000.00	176,320							

REVIEW DATE 03/01/2023 BY WW Total Acres: 10.28 Total Land Value: 34,083 Market: 176,320 Agricultural: 4,083 Common: 30,000 PRINTED 08/02/2023 BY SYS