PT NE1/4 OF SW1/4
IN OR 2576/354
(EX PT IN OR 2042/1751 &

SPURLOCK SARAH BELL &/RHODEN ARNOLD LEWIS JR
17320 CROSS BRANCH RD
HILLIARD, FL 32046

**2023**

**10-3N-23-0000-0008-0010**

## BUILDING CHARACTERISTICS

| ELEMENT | CD | CONSTRUCTION |
|---|---|---|
| Exterior Wall | 20 | FACE BRICK 100 |
| Roof Structur | 08 | IRREGULAR 100 |
| Roof Cover | 03 | COMP SHNGL 100 |
| Interior Wall | 05 | DRYWALL 100 |
| Interior Floo | 14 | CARPET 70 |
| Interior Floo | 12 | HARDWOOD 30 |
| Air Condition | 03 | CENTRAL 100 |
| Heating Type | 04 | AIR DUCTED 100 |
| Bedrooms | | 3 100 |
| Bathrooms | | 2.5 100 |
| Frame | 02 | WOOD FRAME 100 |
| Stories | 1. | 1. 100 |
| Units | | 0 100 |
| Occupancy | 00 | NONE 100 |
| Quality | 03 | Quality Level 03 |
| DOR CODE | 0100 | SINGLE FAMILY |
| MAP NUM | | MKT AREA 09 |
| NEIGHBORHOOD/LOC | 9001.00 | |

| AREA TYPE | TOTAL GROSS AREA | PCT OF BASE | TOT ADJ AREA | SUBAREA MARKET VALUE |
|---|---|---|---|---|
| BAS | 2,662 | 100 | 2,662 | 280,384 |
| FGR | 550 | 55 | 302 | 31,809 |
| FOP | 97 | 30 | 29 | 3,055 |
| FSP | 286 | 40 | 114 | 12,007 |
| TOTALS | 3,595 | | 3,107 | 327,255 |

## MARKET ADJUSTMENTS

| TYPE | MDL | EFF. AREA | TOT ADJ PTS | EFF. BASE RATE | REPL. COST NEW | AYB | EYB | ECON | FNCT | | NORM | % COND |
|---|---|---|---|---|---|---|---|---|---|---|---|---|
| 0900 | 01 | 3,107 | 101.6600 | 120.72 | 375,077 | 2005 | 2005 | 0 | 0 | 0 | 12.75 | 87.25 |

1 SNGL FAM – 100% - 2023 Heated Area: 2662 HX Base Yr 2023

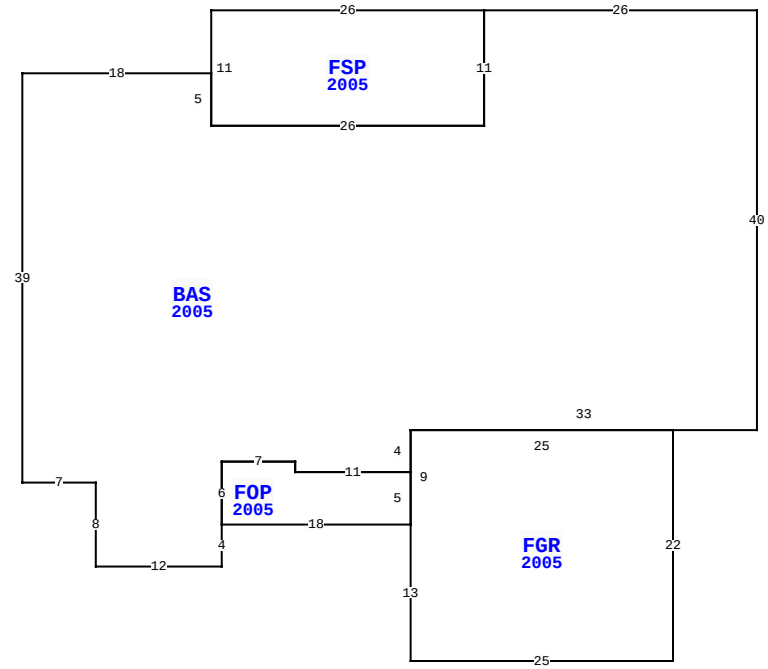


17320 CROSS BRANCH RD, HILLIARD

| | | | |
|---|---|---|---|
| BLD DATE | | LGL DATE | |
| XF DATE | | LAND DATE | 06/15/2023 MLU |
| INC DATE | | AG DATE | |

## NASSAU COUNTY PROPERTY

PAGE 1 of 1 4

### VALUATION SUMMARY

| | | |
|---|---|---|
| VALUATION BY | | STANDARD |
| Tax Group: 4 | Tax Dist: | |
| BUILDING MARKET VALUE | | 327,255 |
| TOTAL MARKET OB/XF VALUE | | 28,479 |
| TOTAL LAND VALUE - MARKET | | 125,780 |
| TOTAL MARKET VALUE | | 481,514 |
| SOH/AGL Deduction | | 61,342 |
| ASSESSED VALUE | | 420,172 |
| TOTAL EXEMPTION VALUE | HX HB | 50,000 |
| BASE TAXABLE VALUE | | 370,172 |
| TOTAL JUST VALUE | | 481,514 |
| NCON VALUE | | 0 |
| INCOME VALUE | | |
| PREVIOUS YEAR MKT VALUE | | 371,043 |

| PERMIT NUM | DESCRIPTION | AMT | ISSUED |
|---|---|---|---|
| 230004849 | NEW POOL | 76,854 | 04/14/2023 |
| E0514255 | ELEC OTHER | 500 | 02/01/2005 |
| B0414242 | ADDITION | 0 | 12/01/2004 |
| B0413184 | NEW CONSTR | 218,000 | 01/07/2004 |

## SALES DATA

| OFF RECORD Number | DATE | TYPE INST | Q U | V I | RSN CD | SALE PRICE |
|---|---|---|---|---|---|---|
| 2576/0354 | 6/27/2022 | WD | Q | I | 01 | 600,000 |
| GRANTOR: PICKETT THOMAS ROGER | | | | | | |
| GRANTEE: SPURLOCK SARAH BELL | | | | | | |
| 1238/0343 | 6/16/2004 | WD | Q | V | | 100,000 |
| GRANTOR: JONES RONALD N & NANC | | | | | | |
| GRANTEE: PICKETT TIMOTHY R & | | | | | | |

## BUILDING NOTES

## BUILDING DIMENSIONS

BAS=[YR=2005] W26 FSP=[YR=2005] W26 S11 E26 N11$ S11 W26 N5 W18 S39 E7 S8 E12 N4 FOP=[YR=2005] E18 FGR=[YR=2005] S13 E25 N22 W25 S9$ N5 W11 N1 W7 S6$ N6 E7 S1 E11 N4 E33 N40 $ .

## EXTRA FEATURES

| LN | OB/XF CODE | DESCRIPTION | BLD | CAP | L | W | UNITS | UT | Adj R | ADJ UNIT PRICE | ORIG COND | YEAR ON | YEAR ACTUAL | Q | % COND | OB/XF MKT VALUE | NOTES |
|---|---|---|---|---|---|---|---|---|---|---|---|---|---|---|---|---|---|
| 1 | 0500 | FP-PRE FAB | 0 | 100 | 0 | 0 | 1.00 | UT | 3,500.00 | 3,500.00 | 100 | 2005 | 2005 | 3 | 90 | 3,150 | |
| 2 | 0202 | BARN WD 30 | 0 | 100 | 0 | 0 | 3,150.00 | SF | 15.00 | 15.00 | 100 | 2005 | 2005 | 3 | 44 | 20,790 | |
| 3 | 0811 | CONCRETE B | 0 | 100 | 0 | 0 | 834.00 | SF | 5.20 | 5.20 | 100 | 2005 | 2005 | 3 | 87 | 3,773 | |
| 4 | 0300 | BOAT DCK W | 0 | 100 | 0 | 0 | 145.00 | SF | 12.00 | 12.00 | 100 | 2005 | 2005 | 3 | 44 | 766 | |

## LAND DESCRIPTION

TOTAL OB/XF 28,479

| LN | USE CODE | CLS | LAND USE DESCRIPTION | CAP | RD | LOC ZONE | FRONT | DEPTH | TOT LND UTS | UNIT TYPE | DT | DPTH FACT | % COND | TOT ADJ | UNIT PRICE | ADJ UNIT PRICE | LAND VALUE | OTHER ADJUSTMENTS AND NOTES | YEAR | DENSITY | DECL | FRZ | YR | CONSRV |
|---|---|---|---|---|---|---|---|---|---|---|---|---|---|---|---|---|---|---|---|---|---|---|---|---|
| 1 | 000115 | C | SFR ACRES | 100 | | OR | | | 6.62 | AC | | 1.00 | 1.00 | 1.00 | 19,000.00 | 19,000.00 | 125,780 | | | | | | | |

REVIEW DATE 08/16/2022 BY TWA Total Acres: 6.62 Total Land Value: 125,780 Market: 0 Agricultural: 0 Common: 125,780 PRINTED 08/02/2023 BY SYS