LOT 195
TRIBUTARY PHASE 1A UNIT 2
OR 2434/703

BARRON NICOLAS A & MICHELE L
75552 SUNBERRY DR
YULEE, FL 32097

2023

10-2N-26-2010-0195-0000

BUILDING CHARACTERISTICS

ELEMENT	CD	CONSTRUCTION
Exterior Wall	31	HARDIE BRD 100
Roof Structur	03	GABLE/HIP 100
Roof Cover	03	COMP SHNGL 100
Interior Wall	05	DRYWALL 100
Interior Floo	11	CLAY TILE 60
Interior Floo	14	CARPET 40
Air Condition	03	CENTRAL 100
Heating Type	04	AIR DUCTED 100
Bedrooms		5 100
Bathrooms		4 100
Frame	02	WOOD FRAME 100
Stories	2.	2. 100
Units		0 100
Occupancy	00	NONE 100
Quality	03	Quality Level 03

DOR CODE	0100	SINGLE FAMILY	
MAP NUM		MKT AREA	05
NEIGHBORHOOD/LOC	5020.00		

AREA TYPE	TOTAL GROSS AREA	PCT OF BASE	TOT ADJ AREA	SUBAREA MARKET VALUE
BAS	2,489	100	2,489	238,148
FGR	644	55	354	33,871
FOP	65	30	20	1,914
FSP	224	40	90	8,611
FUS	672	100	672	64,297
STR	40	10	4	383
TOTALS	4,134		3,629	347,223

MARKET ADJUSTMENTS

TYPE	MDL	EFF. AREA	TOT ADJ PTS	EFF. BASE RATE	REPL. COST NEW	AYB	EYB	ECON	FNCT		NORM	% COND
0100	01	3,629	106.0200	95.68	347,223	2021	2021	0	0	0	0.00	100.00

1 SINGLE FAM – 100% - 2022 Heated Area: 3161 HX Base Yr 2022

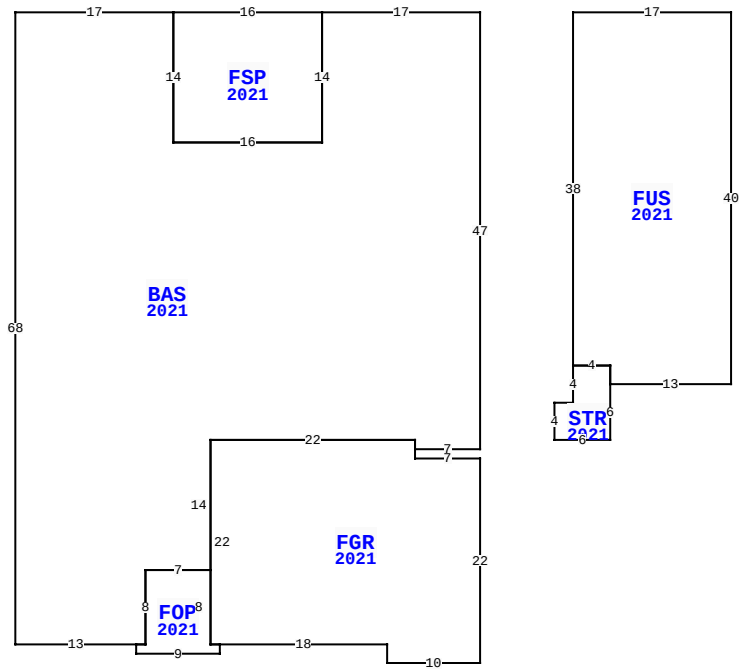

75552 SUNBERRY DR, YULEE

BLD DATE		LGL DATE	
XF DATE		LAND DATE	
INC DATE		AG DATE	

NASSAU COUNTY PROPERTY

PAGE 1 of 1 4

VALUATION SUMMARY

VALUATION BY		STANDARD
Tax Group: 4	Tax Dist:	
BUILDING MARKET VALUE		347,223
TOTAL MARKET OB/XF VALUE		4,992
TOTAL LAND VALUE - MARKET		65,000
TOTAL MARKET VALUE		417,215
SOH/AGL Deduction		47,993
ASSESSED VALUE		369,222
TOTAL EXEMPTION VALUE	HX HB VX	55,000
BASE TAXABLE VALUE		314,222
TOTAL JUST VALUE		417,215
NCON VALUE		4,467
INCOME VALUE		
PREVIOUS YEAR MKT VALUE		354,131

PERMIT NUM	DESCRIPTION	AMT	ISSUED
21004839	CO ISSUED	0	12/23/2021
21004839	NEW CONSTR	450,970	06/01/2021

SALES DATA

OFF RECORD Number	DATE	TYPE INST	Q U /	V I /	RSN CD	SALE PRICE
2529/0752	12/30/2021	WD	Q	I	01	448,100
GRANTOR: DREAM FINDERS HOMES L						
GRANTEE: BARRON NICOLAS ALEX						
2447/1498	3/29/2021	SW	Q	V	05	912,500
GRANTOR: THREE RIVERS DEVELOPE						
GRANTEE: DREAM FINDERS HOMES						

BUILDING NOTES

BUILDING DIMENSIONS

BAS=[YR=2021] W17 FSP=[YR=2021] W16 S14 E16 N14$ S14 W16 N14 W17 S68 E13 FOP=[YR=2021] S1 E9 N1 FGR=[YR=2021] E18 S2 E10 N22 W7 N2 W22 S22 E1$ W1 N8 W7 S8 W1$ E1 N8 E7 N14 E22 S1 E7 N47$ PTR=E10 FUS=[YR=2021] E17 S40 W13 STR=[YR=2021] S6 W6 N4 E2 N4 E4 S2$ N2 W4 N38$ W10$.

EXTRA FEATURES

LN	OB/XF CODE	DESCRIPTION	BLD	CAP	L	W	UNITS	UT	Adj R	ADJ UNIT PRICE	ORIG COND	YEAR ON	YEAR ACTUAL	Q	% COND	OB/XF MKT VALUE	NOTES
1	0811	CONCRETE B	0	100	0	0	960.00	SF	5.20	5.20	100	2021	2021	3	100	4,992	

LAND DESCRIPTION

TOTAL OB/XF 4,992

LN	USE CODE	CLS	LAND USE DESCRIPTION	CAP	RD	LOC ZONE	FRONT	DEPTH	TOT LND UTS	UNIT TYPE	DT	DPTH FACT	% COND	TOT ADJ	UNIT PRICE	ADJ UNIT PRICE	LAND VALUE	OTHER ADJUSTMENTS AND NOTES	YEAR	DENSITY	DECL	FRZ	YR	CONSRV
1	000134	C	SFR POND	100		PUD	74.00	116.00	1.00	LT		1.00	1.00	1.00	65,000.00	65,000.00	65,000							

REVIEW DATE 01/05/2022 BY DJ Total Acres: 0.00 Total Land Value: 65,000 Market: 0 Agricultural: 0 Common: 65,000 PRINTED 08/02/2023 BY SYS