LOT 14
IN OR 1215/572
SETTLER'S RIDGE @ CALICO

DIXON SHANE P & STACEY L
32261 SETTLERS RIDGE DRIVE
BRYCEVILLE, FL 32009

2023

10-1S-24-1935-0014-0000

BUILDING CHARACTERISTICS

ELEMENT	CD	CONSTRUCTION
Exterior Wall	05	AVERAGE 80
Exterior Wall	20	FACE BRICK 20
Roof Structur	08	IRREGULAR 100
Roof Cover	03	COMP SHNGL 100
Interior Wall	05	DRYWALL 100
Interior Floo	14	CARPET 90
Interior Floo	08	SHT VINYL 10
Air Condition	03	CENTRAL 100
Heating Type	04	AIR DUCTED 100
Bedrooms		4 100
Bathrooms		2 100
Frame	02	WOOD FRAME 100
Stories	1.	1. 100
Units		0 100
Occupancy	00	NONE 100
Quality	01	Quality Level 01
DOR CODE	0100	SINGLE FAMILY
MAP NUM		MKT AREA 08
NEIGHBORHOOD/LOC	8003.00	

AREA TYPE	TOTAL GROSS AREA	PCT OF BASE	TOT ADJ AREA	SUBAREA MARKET VALUE
BAS	1,920	100	1,920	197,635
FGR	504	55	277	28,513
FOP	44	30	13	1,338
PTO	183	5	9	927
UOP	390	20	78	8,029
TOTALS	3,041		2,297	236,441

MARKET ADJUSTMENTS

TYPE	MDL	EFF. AREA	TOT ADJ PTS	EFF. BASE RATE	REPL. COST NEW	AYB	EYB	ECON	FNCT		NORM	% COND
0900	01	2,297	95.7852	113.74	261,261	2004	2004	0	0	0	9.50	90.50

1 SNGL FAM – 100% - 2005 Heated Area: 1920 HX Base Yr 2005

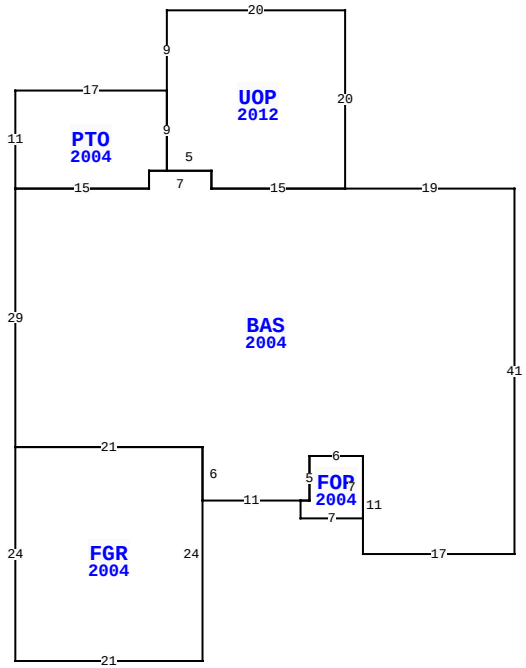

32261 SETTLERS RIDGE DR, BRYCEVILLE

BLD DATE		LGL DATE	
XF DATE		LAND DATE	
INC DATE		AG DATE	

NASSAU COUNTY PROPERTY

PAGE 1 of 1 6

VALUATION SUMMARY

VALUATION BY		STANDARD
Tax Group: 6	Tax Dist:	
BUILDING MARKET VALUE		236,441
TOTAL MARKET OB/XF VALUE		4,289
TOTAL LAND VALUE - MARKET		69,300
TOTAL MARKET VALUE		310,030
SOH/AGL Deduction		136,417
ASSESSED VALUE		173,613
TOTAL EXEMPTION VALUE	HX HB	50,000
BASE TAXABLE VALUE		123,613
TOTAL JUST VALUE		310,030
NCON VALUE		0
INCOME VALUE		
PREVIOUS YEAR MKT VALUE		305,099

PERMIT NUM	DESCRIPTION	AMT	ISSUED
0311835	NEW CONSTR	141,782	10/02/2003

SALES DATA

OFF RECORD Number	DATE	TYPE INST	Q / U	V / I	RSN CD	SALE PRICE
1215/0572	3/15/2004	WD	Q	I		180,600
GRANTOR: CALICO DEVELOPMENT CO						
GRANTEE: DIXON SHANE P & STA						
1168/1094	9/05/2003	WD	U	V	19	43,900
GRANTOR: CALICO DEVELOPMENT CO						
GRANTEE: SEDA CONSTRUCTION C						

BUILDING NOTES

BUILDING DIMENSIONS

BAS=[YR=2004] W19 UOP=[YR=2012] N20 W20 S9 PTO=[YR=2004] W17 S11 E15 N2 E2 N9$ S9 E5 S2 E15$ W15 N2 W7 S2 W15 S29 FGR=[YR=2004] S24 E21 N24 W21$ E21 S6 E11 FOP=[YR=2004] S2E7 N7 W6 S5 W1$ E1 N5 E6 S11 E17 N41$.

EXTRA FEATURES

LN	OB/XF CODE	DESCRIPTION	BLD	CAP	L	W	UNITS	UT	Adj R	ADJ UNIT PRICE	ORIG COND	YEAR ON	YEAR ACTUAL	Q	% COND	OB/XF MKT VALUE	NOTES
1	0811	CONCRETE B	0	100	0	0	959.00	SF	5.20	5.20	100	2004	2004	3	86	4,289	

LAND DESCRIPTION

TOTAL OB/XF 4,289

LN	USE CODE	CLS	LAND USE DESCRIPTION	CAP	RD	LOC ZONE	FRONT	DEPTH	TOT LND UTS	UNIT TYPE	DT	DPTH FACT	% COND	TOT ADJ	UNIT PRICE	ADJ UNIT PRICE	LAND VALUE	OTHER ADJUSTMENTS AND NOTES	YEAR	DENSITY	DECL	FRZ	YR	CONSRV
1	000115	C	SFR ACRES	100	0003		0.00	0.00	3.85	AC		1.00	1.00	1.00	18,000.00	18,000.00	69,300							

REVIEW DATE 01/14/2021 BY WWA Total Acres: 3.85 Total Land Value: 69,300 Market: 0 Agricultural: 0 Common: 69,300 PRINTED 08/02/2023 BY SYS