LOTS 12 & 13
IN OR 497 PG 805 &
L/E IN OR 789/22

GILBERT KYLE
54100 SUNSHINE DRIVE
CALLAHAN, FL 32011

2023

10-1N-25-2882-0012-0000

NASSAU COUNTY PROPERTY

BUILDING CHARACTERISTICS

ELEMENT	CD	CONSTRUCTION
Exterior Wall	06	BD/BATTEN 100
Roof Structur	03	GABLE/HIP 100
Roof Cover	03	COMP SHNGL 100
Interior Wall	05	DRYWALL 70
Interior Wall	04	PLYWOOD 30
Interior Floo	14	CARPET 100
Air Condition	03	CENTRAL 100
Heating Type	04	AIR DUCTED 100
Bedrooms		3 100
Bathrooms		2 100
Frame	02	WOOD FRAME 100
Stories	1.	1. 100
Units		0 100
BUD8 Adjustme	06	DIST 1D 100
Quality	02	Quality Level 02

DOR CODE 0200 MOBILE HOME
MAP NUM
MKT AREA 08
NEIGHBORHOOD/LOC 8025.00

AREA TYPE	TOTAL GROSS AREA	PCT OF BASE	TOT ADJ AREA	SUBAREA MARKET VALUE
BAS	1,288	100	1,288	12,658
UOP	126	25	32	314
UOP	136	25	34	334
TOTALS	1,550		1,354	13,307

MARKET ADJUSTMENTS

TYPE	MDL	EFF. AREA	TOT ADJ PTS	EFF. BASE RATE	REPL. COST NEW	AYB	EYB	ECON	FNCT	AP	NORM	% COND
0820	02	1,354	75.6000	49.14	66,536	1985	1985	0	0	20	70.00	20.00

1 M/H 93- – 100% - 0 Heated Area: 1288 HX Base Yr

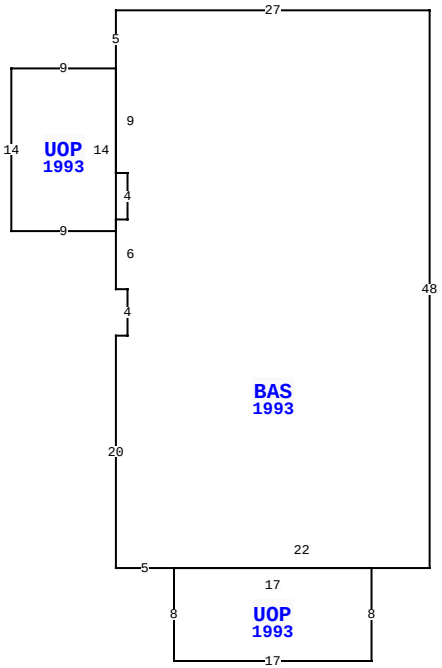

54100 SUNSHINE DR, CALLAHAN

BLD DATE		LGL DATE	
XF DATE		LAND DATE	
INC DATE		AG DATE	

VALUATION SUMMARY

VALUATION BY		STANDARD
Tax Group: 6	Tax Dist:	
BUILDING MARKET VALUE		13,307
TOTAL MARKET OB/XF VALUE		7,114
TOTAL LAND VALUE - MARKET		70,000
TOTAL MARKET VALUE		90,421
SOH/AGL Deduction		55,619
ASSESSED VALUE		34,802
TOTAL EXEMPTION VALUE	HX HB DX	30,000
BASE TAXABLE VALUE		4,802
TOTAL JUST VALUE		90,421
NCON VALUE		0
INCOME VALUE		
PREVIOUS YEAR MKT VALUE		87,565

PERMIT NUM	DESCRIPTION	AMT	ISSUED
7549	MH MOVE-ON	12,000	11/10/1988
4898	GARAGE	10,608	05/18/1988

SALES DATA

OFF RECORD Number	DATE	TYPE INST	Q U	V I	RSN CD	SALE PRICE
0789/0022	4/02/1997	WD	U	I	18	100
GRANTOR: GILBERT M FRANK & MER						
GRANTEE: GILBERT KYLE						
0497/0806	9/10/1986	WD	Q	V		8,500
GRANTOR: CONYERS GAYLE ET AL						
GRANTEE: GILBERT M FRANK						

BUILDING NOTES

BUILDING DIMENSIONS

BAS=[YR=1993] W27 S5 UOP=[YR=1993] W9 S14 E9 N14 $ S9 E1 S4 W1 S6 E1 S4 W1 S20 E5 UOP=[YR=1993] S8 E17 N8 W17 $ E22 N48 $.

EXTRA FEATURES

LN	OB/XF CODE	DESCRIPTION	BLD	CAP	L	W	UNITS	UT	Adj R	ADJ UNIT PRICE	ORIG COND	YEAR ON	YEAR ACTUAL	Q	% COND	OB/XF MKT VALUE	NOTES
1	0511	GARAGE CB-	0	100	24	26	624.00	SF	20.00	20.00	100	1988	1988	3	57	7,114	

LAND DESCRIPTION

TOTAL OB/XF 7,114

LN	USE CODE	CLS	LAND USE DESCRIPTION	CAP	RD	LOC ZONE	FRONT	DEPTH	TOT LND UTS	UNIT TYPE	DT	DPTH FACT	% COND	TOT ADJ	UNIT PRICE	ADJ UNIT PRICE	LAND VALUE	OTHER ADJUSTMENTS AND NOTES	YEAR	DENSITY	DECL	FRZ	YR	CONSRV
1	000102	C	SFR/MH	100		OR	142.00	306.00	1.00	LT		1.00	1.00	1.00	35,000.00	35,000.00	35,000							
2	000102	C	SFR/MH	100			142.00	306.00	1.00	LT		1.00	1.00	1.00	35,000.00	35,000.00	35,000							

REVIEW DATE 09/07/2022 BY KBA Total Acres: 0.00 Total Land Value: 70,000 Market: 0 Agricultural: 0 Common: 70,000 PRINTED 08/02/2023 BY SYS