BLOCK 169 LOTS 9 THRU 16
PT OR 1473/814
TOWN OF HILLIARD

B Y FRANKLIN PROPERTIES INC
551856 US HWY 1 STE 111
HILLIARD, FL 32046

2023

08-3N-24-2380-0169-0090

NASSAU COUNTY PROPERTY

BUILDING CHARACTERISTICS

ELEMENT	CD	CONSTRUCTION
Exterior Wall	05	AVERAGE 100
Roof Structur	03	GABLE/HIP 100
Roof Cover	03	COMP SHNGL 100
Interior Wall	05	DRYWALL 100
Interior Floo	14	CARPET 90
Interior Floo	08	SHT VINYL 10
Air Condition	03	CENTRAL 100
Heating Type	04	AIR DUCTED 100
Bedrooms		3 100
Bathrooms		2 100
Frame	02	WOOD FRAME 100
Story Height		0 100
RMS		0 100
Units		2 100
Quality	01	Quality Level 01

DOR CODE	0800	MULTI-FAMILY	
MAP NUM		MKT AREA	06
NEIGHBORHOOD/LOC	6001.00		

AREA TYPE	TOTAL GROSS AREA	PCT OF BASE	TOT ADJ AREA	SUBAREA MARKET VALUE
BAS	1,480	100	1,480	96,474
FOP	50	30	15	977
FOP	50	30	15	977
FOP	60	30	18	1,173
FOP	60	30	18	1,173
FUS	832	100	832	54,234
TOTALS	2,532		2,378	155,011

MARKET ADJUSTMENTS

TYPE	MDL	EFF. AREA	TOT ADJ PTS	EFF. BASE RATE	REPL. COST NEW	AYB	EYB	ECON	FNCT		NORM	% COND
0301	03	2,378	82.5390	72.63	172,714	1996	2001	0	0	0	10.25	89.75

1 APARTMENT – 0% - 0 Heated Area: 2312 HX Base Yr

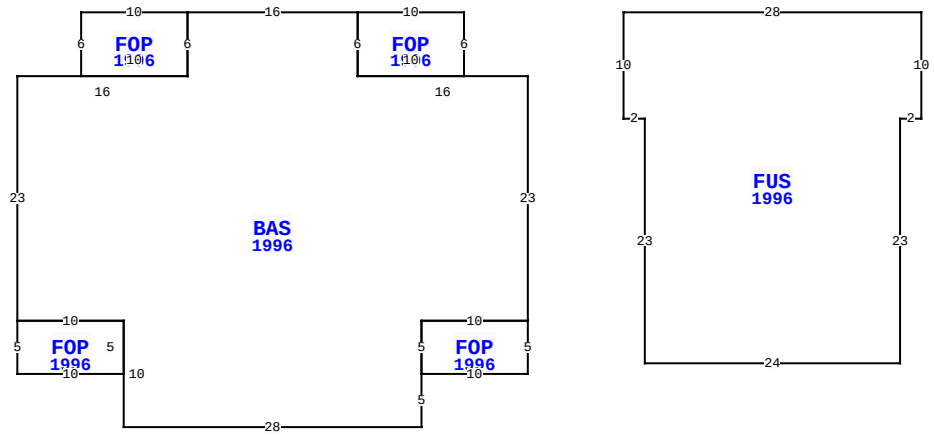

27358 W FIRST AV, HILLIARD

BLD DATE		LGL DATE	
XF DATE		LAND DATE	
INC DATE		AG DATE	

VALUATION SUMMARY

VALUATION BY	STANDARD
Tax Group: 3	Tax Dist:
BUILDING MARKET VALUE	364,095
TOTAL MARKET OB/XF VALUE	29,794
TOTAL LAND VALUE - MARKET	60,000
TOTAL MARKET VALUE	453,889
SOH/AGL Deduction	161,870
ASSESSED VALUE	292,019
TOTAL EXEMPTION VALUE	0
BASE TAXABLE VALUE	292,019
TOTAL JUST VALUE	453,889
NCON VALUE	0
INCOME VALUE	
PREVIOUS YEAR MKT VALUE	328,475

PERMIT NUM	DESCRIPTION	AMT	ISSUED
20170176	REPAIR/RRF	0	09/25/2017

SALES DATA

OFF RECORD Number	DATE	TYPE INST	Q / U	V / I	RSN CD	SALE PRICE
1473/0814	1/22/2007	WD	U	I	01	100
GRANTOR: FRANKLIN BOBBY Y						
GRANTEE: B Y FRANKLIN PROPER						
0804/1299	8/27/1997	QC	U	V	07	100
GRANTOR: FRANKLIN BOBBY Y & LA						
GRANTEE: FRANKLIN BOBBY Y II						

BUILDING NOTES

BUILDING DIMENSIONS

FOP=[YR=1996] W10 BAS=[YR=1996] W16 FOP=[YR=1996] W10 S6 E10 N6$ S6 W16 S23 FOP=[YR=1996] S5 E10 N5 W10$ E10 S10E28 N5 FOP=[YR=1996] E10 N5 W10 S5$ N5 E10 N23 W16 N6$ S6 E10 N6$ PTR=E15 FUS=[YR=1996] E28 S10 W2 S23 W24 N23 W2 N10$ W15$.

EXTRA FEATURES

L N	OB/XF CODE	DESCRIPTION	BLD	CAP	L	W	UNITS	UT	Adj R	ADJ UNIT PRICE	ORIG COND	YEAR ON	YEAR ACTUAL	Q	% COND	OB/XF MKT VALUE	NOTES
1	0500	FP-PRE FAB	0	0	0	0	2.00	UT	3,500.00	3,500.00	100	1996	1996	3	80	5,600	
2	0812	CONCRETE C	0	0	0	0	2,559.00	SF	4.00	4.00	100	1996	1996	3	73	7,472	
3	0500	FP-PRE FAB	0	0	0	0	4.00	UT	3,500.00	3,500.00	100	1997	1997	3	81	11,340	
4	0812	CONCRETE C	0	0	0	0	1,794.00	SF	4.00	4.00	100	1997	1997	3	75	5,382	

LAND DESCRIPTION

TOTAL OB/XF 29,794

L N	USE CODE	CLS	LAND USE DESCRIPTION	CAP	R D	LOC ZONE	FRONT	DEPTH	TOT LND UTS	UNIT TYPE	D T	DPTH FACT	% COND	TOT ADJ	UNIT PRICE	ADJ UNIT PRICE	LAND VALUE	OTHER ADJUSTMENTS AND NOTES	YEAR	DENSITY	DECL	FRZ	YR	CONSRV
1	000800	C	MULTI-FAM	0	0006	R3	200.00	125.00	200.00	FF		1.00	1.00	1.00	300.00	300.00	60,000							

REVIEW DATE 01/30/2018 BY TWX Total Acres: 0.00 Total Land Value: 60,000 Market: 0 Agricultural: 0 Common: 60,000 PRINTED 08/02/2023 BY SYS

BLOCK 169 LOTS 9 THRU 16
PT OR 1473/814
TOWN OF HILLIARD

B Y FRANKLIN PROPERTIES INC
551856 US HWY 1 STE 111
HILLIARD, FL 32046

2023

08-3N-24-2380-0169-0090

NASSAU COUNTY PROPERTY

BUILDING CHARACTERISTICS

ELEMENT	CD	CONSTRUCTION
Exterior Wall	05	AVERAGE 100
Roof Structur	03	GABLE/HIP 100
Roof Cover	03	COMP SHNGL 100
Interior Wall	05	DRYWALL 100
Interior Floo	14	CARPET 100
Air Condition	03	CENTRAL 100
Heating Type	04	AIR DUCTED 100
Bedrooms		3 100
Bathrooms		2 100
Frame	02	WOOD FRAME 100
Story Height		0 100
RMS		0 100
Units		2 100
Quality	01	Quality Level 01

DOR CODE	0800	MULTI-FAMILY	
MAP NUM		MKT AREA	06
NEIGHBORHOOD/LOC	6001.00		

AREA TYPE	TOTAL GROSS AREA	PCT OF BASE	TOT ADJ AREA	SUBAREA MARKET VALUE
BAS	1,932	100	1,932	126,077
FOP	70	30	21	1,370
FOP	70	30	21	1,370
FOP	91	30	27	1,762
FOP	91	30	27	1,762
FUS	1,176	100	1,176	76,743
TOTALS	3,430		3,204	209,084

MARKET ADJUSTMENTS

TYPE	MDL	EFF. AREA	TOT ADJ PTS	EFF. BASE RATE	REPL. COST NEW	AYB	EYB	ECON	FNCT		NORM	% COND
0301	03	3,204	82.6200	72.71	232,963	1997	2001	0	0	0	10.25	89.75

2 APARTMENT – 0% - 0 Heated Area: 3108 HX Base Yr

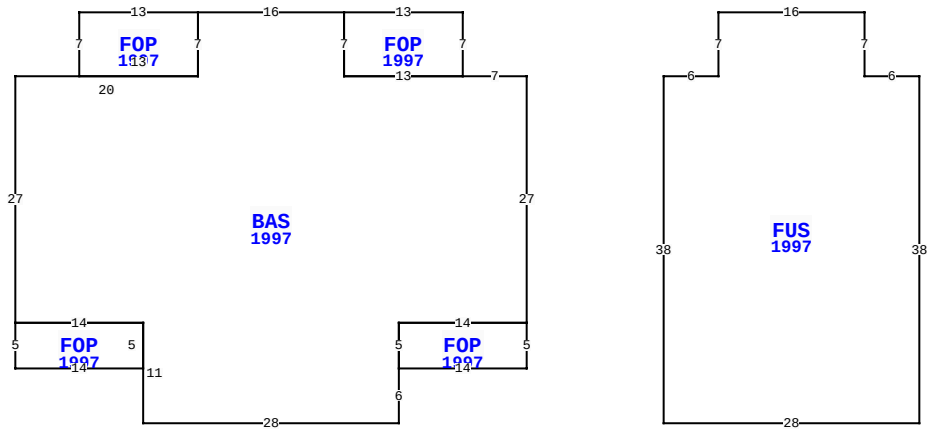

27358 W FIRST AV, HILLIARD

BLD DATE		LGL DATE	
XF DATE		LAND DATE	
INC DATE		AG DATE	

VALUATION SUMMARY

VALUATION BY	STANDARD
Tax Group: 3	Tax Dist:
BUILDING MARKET VALUE	364,095
TOTAL MARKET OB/XF VALUE	29,794
TOTAL LAND VALUE - MARKET	60,000
TOTAL MARKET VALUE	453,889
SOH/AGL Deduction	161,870
ASSESSED VALUE	292,019
TOTAL EXEMPTION VALUE	0
BASE TAXABLE VALUE	292,019
TOTAL JUST VALUE	453,889
NCON VALUE	0
INCOME VALUE	
PREVIOUS YEAR MKT VALUE	328,475

PERMIT NUM	DESCRIPTION	AMT	ISSUED

SALES DATA

OFF RECORD Number	DATE	TYPE INST	Q U /	V I /	RSN CD	SALE PRICE
1473/0814	1/22/2007	WD	U	I	01	100
GRANTOR: FRANKLIN BOBBY Y						
GRANTEE: B Y FRANKLIN PROPER						
0804/1299	8/27/1997	QC	U	V	07	100
GRANTOR: FRANKLIN BOBBY Y & LA						
GRANTEE: FRANKLIN BOBBY Y II						

BUILDING NOTES

BUILDING DIMENSIONS

BAS=[YR=1997] W7 FOP=[YR=1997] N7 W13 S7 E13 $ W13 N7 W16 FOP=[YR=1997] W13 S7 E13 N7 $ S7 W20 S27 FOP=[YR=1997] S5 E14 N5 W14 $ E14 S11 E28 N6 FOP=[YR=1997] E14 N5 W14 S5 $ N5 E14 N27 $ PTR= E15 FUS=[YR=1997] E6 N7 E16 S7 E6 S38 W28 N38 $ W15 $.

EXTRA FEATURES

L N	OB/XF CODE	DESCRIPTION	BLD	CAP	L	W	UNITS	UT	Adj R	ADJ UNIT PRICE	ORIG COND	YEAR ON	YEAR ACTUAL	Q	% COND	OB/XF MKT VALUE	NOTES

LAND DESCRIPTION

TOTAL OB/XF 0

L N	USE CODE	CLS	LAND USE DESCRIPTION	CAP	R D	LOC ZONE	FRONT	DEPTH	TOT LND UTS	UNIT TYPE	D T	DPTH FACT	% COND	TOT ADJ	UNIT PRICE	ADJ UNIT PRICE	LAND VALUE	OTHER ADJUSTMENTS AND NOTES	YEAR	DENSITY	DECL	FRZ	YR	CONSRV

REVIEW DATE 01/30/2018 BY TWX Total Acres: 0.00 Total Land Value: 60,000 Market: 0 Agricultural: 0 Common: 60,000 PRINTED 08/02/2023 BY SYS