BLOCK 168 LOTS 21 22 23 & 24 &
E10 FT OF LOT 20
IN OR 2353/1926

STOCK DONALD/HURST LAURIE M
27074 OHIO STREET
HILLIARD, FL 32046

2023

08-3N-24-2380-0168-0210

NASSAU COUNTY PROPERTY

BUILDING CHARACTERISTICS

ELEMENT	CD	CONSTRUCTION
Exterior Wall	20	FACE BRICK 100
Roof Structur	08	IRREGULAR 100
Roof Cover	03	COMP SHNGL 100
Interior Wall	05	DRYWALL 100
Interior Floo	13	LVT/LAMNT 80
Interior Floo	14	CARPET 20
Air Condition	03	CENTRAL 100
Heating Type	04	AIR DUCTED 100
Bedrooms		3 100
Bathrooms		2.5 100
Frame	02	WOOD FRAME 100
Stories	1.	1. 100
Units		0 100
Occupancy	00	NONE 100
Quality	01	Quality Level 01
DOR CODE	0100	SINGLE FAMILY
MAP NUM		MKT AREA 06
NEIGHBORHOOD/LOC	6001.00	

AREA TYPE	TOTAL GROSS AREA	PCT OF BASE	TOT ADJ AREA	SUBAREA MARKET VALUE
BAS	1,933	100	1,933	198,940
FGR	506	55	278	28,611
FOP	25	30	8	823
FOP	244	30	73	7,513
TOTALS	2,708		2,292	235,887

MARKET ADJUSTMENTS

TYPE	MDL	EFF. AREA	TOT ADJ PTS	EFF. BASE RATE	REPL. COST NEW	AYB	EYB	ECON	FNCT		NORM	% COND
0900	01	2,292	100.1952	118.98	272,702	2004	2004	0	0	0	13.50	86.50

1 SNGL FAM – 100% - 2021 Heated Area: 1933 HX Base Yr 2021

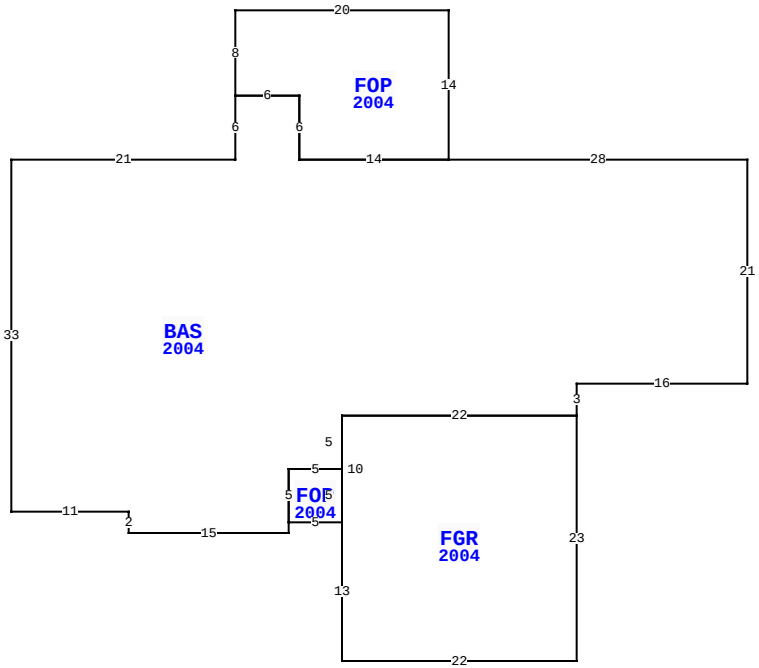

27074 OHIO ST, HILLIARD

BLD DATE		LGL DATE	
XF DATE		LAND DATE	
INC DATE		AG DATE	

VALUATION SUMMARY

VALUATION BY		STANDARD
Tax Group: 3	Tax Dist:	
BUILDING MARKET VALUE		235,887
TOTAL MARKET OB/XF VALUE		29,177
TOTAL LAND VALUE - MARKET		33,000
TOTAL MARKET VALUE		298,064
SOH/AGL Deduction		65,304
ASSESSED VALUE		232,760
TOTAL EXEMPTION VALUE	HX HB	50,000
BASE TAXABLE VALUE		182,760
TOTAL JUST VALUE		298,064
NCON VALUE		0
INCOME VALUE		
PREVIOUS YEAR MKT VALUE		253,909

PERMIT NUM	DESCRIPTION	AMT	ISSUED
20210053	CARPORT	12,318	03/17/2021
1753	SWIM POOL	25,000	03/25/2004
0312283	NEW CONSTR	80,000	12/09/2003

SALES DATA

OFF RECORD Number	DATE	TYPE INST	Q / U	V / I	RSN CD	SALE PRICE
2353/1926	4/15/2020	WD	Q	I	01	220,000
GRANTOR: DURHAM BOBBY G & JOYC						
GRANTEE: STOCK DONALD & LAUR						
1210/1204	2/26/2004	WD	Q	I		139,900
GRANTOR: L & B LANDS INC						
GRANTEE: DURHAM BOBBY G & JO						

BUILDING NOTES

BUILDING DIMENSIONS

BAS=[YR=2004] W28 FOP=[YR=2004] N14 W20 S8 E6 S6 E14$ W14 N6 W6 S6 W21 S33 E11 S2 E15 N1 FOP=[YR=2004] E5 FGR=[YR=2004] S13 E22 N23 W22 S10$ N5 W5 S5$ N5 E5 N5 E22 N3 E16 N21$.

EXTRA FEATURES

L N	OB/XF CODE	DESCRIPTION	BLD	CAP	L	W	UNITS	UT	Adj R	ADJ UNIT PRICE	ORIG COND	YEAR ON	YEAR ACTUAL	Q	% COND	OB/XF MKT VALUE	NOTES
3	0861	POOL GUNIT	0	100	0	0	390.00	SF	85.00	85.00	100	2004	2004	3	40	13,260	
4	0845	KOOL DECK	0	100	0	0	749.00	SF	7.25	7.25	100	2004	2004	3	86	4,670	
5	0812	CONCRETE C	0	100	0	0	2,219.00	SF	4.00	4.00	100	2004	2004	3	86	7,633	
6	0351	CARPORT MT	0	100	30	18	540.00	SF	6.90	6.90	100	2021	2021	3	97	3,614	

LAND DESCRIPTION

TOTAL OB/XF 29,177

L N	USE CODE	CLS	LAND USE DESCRIPTION	CAP	R D	LOC ZONE	FRONT	DEPTH	TOT LND UTS	UNIT TYPE	D T	DPTH FACT	% COND	TOT ADJ	UNIT PRICE	ADJ UNIT PRICE	LAND VALUE	OTHER ADJUSTMENTS AND NOTES	YEAR	DENSITY	DECL	FRZ	YR	CONSRV
1	000100	C	SFR	100	0006	R2	110.00	125.00	110.00	FF		1.00	1.00	1.00	300.00	300.00	33,000							

REVIEW DATE 07/22/2021 BY TWX Total Acres: 0.00 Total Land Value: 33,000 Market: 0 Agricultural: 0 Common: 33,000 PRINTED 08/02/2023 BY SYS