BLOCK 159 LOTS 6 THRU 8
TOWN OF HILLIARD

FRALICK JIMMY III & CHRISTINA
27434 W 2ND AVE
HILLIARD, FL 32046

2023

08-3N-24-2380-0159-0060

BUILDING CHARACTERISTICS

ELEMENT	CD	CONSTRUCTION
Exterior Wall	16	WD FR STUC 100
Roof Structur	08	IRREGULAR 100
Roof Cover	03	COMP SHNGL 100
Interior Wall	05	DRYWALL 100
Interior Floo	09	PINE WOOD 100
Air Condition	01	NONE 100
Heating Type	02	CONVECTION 100
Bedrooms		3 100
Bathrooms		1 100
Frame	02	WOOD FRAME 100
Stories	1.	1. 100
Units		0 100
BUD8 Adjustme	03	DIST HI 100
Occupancy	00	NONE 100
Quality	03	Quality Level 03

DOR CODE 0100 SINGLE FAMILY
MAP NUM | MKT AREA 06
NEIGHBORHOOD/LOC 6001.00

AREA TYPE	TOTAL GROSS AREA	PCT OF BASE	TOT ADJ AREA	SUBAREA MARKET VALUE
BAS	1,934	100	1,934	39,641
FEP	192	80	154	3,156
UCP	272	20	54	1,107
UDG	210	55	116	2,378
UOP	16	20	3	62
UOP	16	20	3	62
UST	90	45	40	820
UST	150	45	68	1,394
TOTALS	2,880		2,372	48,619

MARKET ADJUSTMENTS

TYPE	MDL	EFF. AREA	TOT ADJ PTS	EFF. BASE RATE	REPL. COST NEW	AYB	EYB	ECON	FNCT	AP	NORM	% COND
0100	01	2,372	88.2000	79.60	188,811	1910	1940	0	0	30	44.25	25.75

1 SINGLE FAM – 100% - 2022 Heated Area: 1934 HX Base Yr 2022

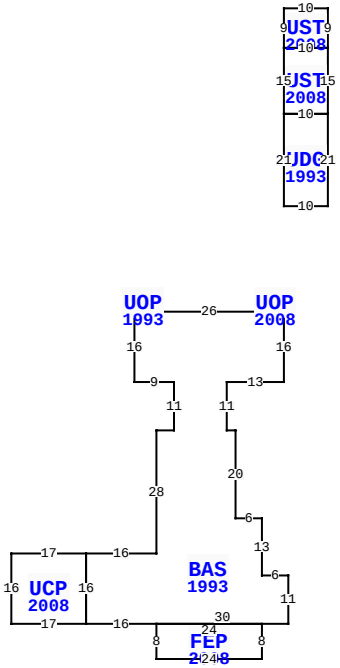

27437 W SECOND AVE, HILLIARD

BLD DATE		LGL DATE	
XF DATE		LAND DATE	
INC DATE		AG DATE	

NASSAU COUNTY PROPERTY

PAGE 1 of 1 3

VALUATION SUMMARY

VALUATION BY		STANDARD
Tax Group: 3	Tax Dist:	
BUILDING MARKET VALUE		48,619
TOTAL MARKET OB/XF VALUE		322
TOTAL LAND VALUE - MARKET		22,500
TOTAL MARKET VALUE		71,441
SOH/AGL Deduction		5,697
ASSESSED VALUE		65,744
TOTAL EXEMPTION VALUE	HX HB	40,744
BASE TAXABLE VALUE		25,000
TOTAL JUST VALUE		71,441
NCON VALUE		0
INCOME VALUE		
PREVIOUS YEAR MKT VALUE		63,829

PERMIT NUM	DESCRIPTION	AMT	ISSUED
B0901012	REPAIR/RRF	0	01/20/2009

SALES DATA

OFF RECORD Number	DATE	TYPE INST	Q U	V I	RSN CD	SALE PRICE
2338/1092	2/07/2020	WD	Q	I	01	65,000
GRANTOR: LSG HOMES LLC						
GRANTEE: FRALICK JIMMY III &						
2111/1807	4/04/2017	QC	U	I	11	100
GRANTOR: MCG HOMES LLC						
GRANTEE: LSG HOMES LLC						

BUILDING NOTES

BUILDING DIMENSIONS

UOP=[YR=2008] W4 S4 BAS=[YR=1993] W26 UOP=[YR=1993] N4 W4 S4 E4$ W4 S16 E9 S11 W4 S28 W16 UCP=[YR=2008] W17 S16 E17 N16$ S16 E16 FEP=[YR=2008] S8 E24 N8 W24$ E30 N11 W6 N13 W6 N20 W2 N11 E13 N16 W4$ E4 N4$ PTR=N20 UDG=[YR=1993] N21 UST=[YR=2008] N15 UST=[YR=2008] N9 E10 S9 W10$ E10 S15 W10$ E10 S21 W10$ S20$.

EXTRA FEATURES

LN	OB/XF CODE	DESCRIPTION	BLD	CAP	L	W	UNITS	UT	Adj R	ADJ UNIT PRICE	ORIG COND	YEAR ON	YEAR ACTUAL	Q	% COND	OB/XF MKT VALUE	NOTES
1	0810	CONCRETE A	0	100	16	5	80.00	SF	6.50	6.50	100	1990	1990	3	62	322	

LAND DESCRIPTION

TOTAL OB/XF 322

LN	USE CODE	CLS	LAND USE DESCRIPTION	CAP	RD	LOC ZONE	FRONT	DEPTH	TOT LND UTS	UNIT TYPE	DT	DPTH FACT	% COND	TOT ADJ	UNIT PRICE	ADJ UNIT PRICE	LAND VALUE	OTHER ADJUSTMENTS AND NOTES	YEAR	DENSITY	DECL	FRZ	YR	CONSRV
1	000100	C	SFR	100	0006	R2	75.00	125.00	75.00	FF		1.00	1.00	1.00	300.00	300.00	22,500							

REVIEW DATE 12/02/2022 BY WWX Total Acres: 0.00 Total Land Value: 22,500 Market: 0 Agricultural: 0 Common: 22,500 PRINTED 08/02/2023 BY SYS