BLOCK 56 NW 140' OF LOT 3
IN OR 1968/1799
TOWN OF HILLIARD

SAMPSON JAMES A
37197 W THIRD ST
HILLIARD, FL 32046-0034

2023

08-3N-24-2380-0056-0031

NASSAU COUNTY PROPERTY

BUILDING CHARACTERISTICS

ELEMENT	CD	CONSTRUCTION
Exterior Wall	19	COMMON BRK 100
Roof Structur	03	GABLE/HIP 100
Roof Cover	03	COMP SHNGL 100
Interior Wall	03	PLASTER 80
Interior Wall	04	PLYWOOD 20
Interior Floo	14	CARPET 90
Interior Floo	11	CLAY TILE 10
Air Condition	03	CENTRAL 100
Heating Type	04	AIR DUCTED 100
Bedrooms		3 100
Bathrooms		1.5 100
Frame	02	WOOD FRAME 100
Stories	1.	1. 100
Units		0 100
Occupancy	00	NONE 100
Quality	03	Quality Level 03
DOR CODE	0100	SINGLE FAMILY
MAP NUM		MKT AREA 06
NEIGHBORHOOD/LOC	6001.00	

AREA TYPE	TOTAL GROSS AREA	PCT OF BASE	TOT ADJ AREA	SUBAREA MARKET VALUE
BAS	1,796	100	1,796	104,145
FGR	318	55	175	10,148
FOP	30	30	9	522
UOP	35	20	7	406
UOP	112	20	22	1,276
UOP	136	20	27	1,566
TOTALS	2,427		2,036	118,062

MARKET ADJUSTMENTS

TYPE	MDL	EFF. AREA	TOT ADJ PTS	EFF. BASE RATE	REPL. COST NEW	AYB	EYB	ECON	FNCT		NORM	% COND
0100	01	2,036	121.2260	109.41	222,759	1948	1948	0	0	0	47.00	53.00

1 SINGLE FAM – 100% - 1997 Heated Area: 1796 HX Base Yr 1997

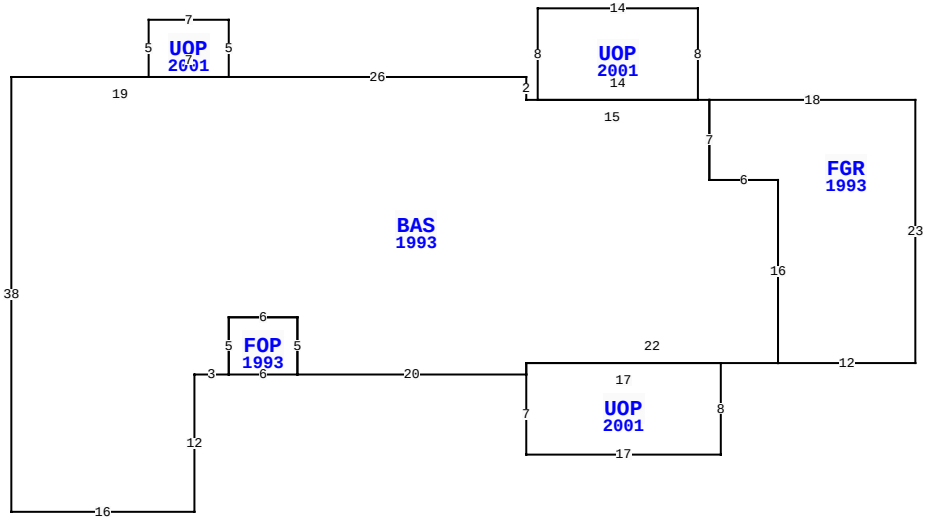

37197 W THIRD ST, HILLIARD

BLD DATE		LGL DATE	
XF DATE		LAND DATE	
INC DATE		AG DATE	

VALUATION SUMMARY

VALUATION BY		STANDARD
Tax Group: 3	Tax Dist:	
BUILDING MARKET VALUE		118,062
TOTAL MARKET OB/XF VALUE		5,780
TOTAL LAND VALUE - MARKET		42,000
TOTAL MARKET VALUE		165,842
SOH/AGL Deduction		84,792
ASSESSED VALUE		81,050
TOTAL EXEMPTION VALUE	HX HB WR	55,000
BASE TAXABLE VALUE		26,050
TOTAL JUST VALUE		165,842
NCON VALUE		0
INCOME VALUE		
PREVIOUS YEAR MKT VALUE		143,797

PERMIT NUM	DESCRIPTION	AMT	ISSUED

SALES DATA

OFF RECORD Number	DATE	TYPE INST	Q / U	V / I	RSN CD	SALE PRICE
1968/1799	3/18/2015	QC	U	I	11	100
GRANTOR: SAMPSON JAMES A						
GRANTEE: SAMPSON JAMES A						
0771/0999	9/20/1996	WD	Q	I		60,000
GRANTOR: JACOBUS ANN						
GRANTEE: SAMPSON JAMES & DON						

BUILDING NOTES

BUILDING DIMENSIONS

FGR=[YR=1993] W18 BAS=[YR=1993] W1 UOP=[YR=2001] N8 W14 S8 E14$ W15 N2 W26 UOP=[YR=2001] N5 W7 S5 E7$ W19 S38 E16 N12 E3 FOP=[YR=1993] E6 N5 W6 S5 $ N5 E6 S5 E20 UOP=[YR=2001] S7 E17 N8 W17 S1$ N1 E22 N16 W6 N7$ S7 E6 S16 E12 N23$.

EXTRA FEATURES

LN	OB/XF CODE	DESCRIPTION	BLD	CAP	L	W	UNITS	UT	Adj R	ADJ UNIT PRICE	ORIG COND	YEAR ON	YEAR ACTUAL	Q	% COND	OB/XF MKT VALUE	NOTES
1	0510	GARAGE WD-	0	100	16	20	320.00	SF	35.00	35.00	100	1970	1970	3	20	2,240	
2	0812	CONCRETE C	0	100	118	10	1,180.00	SF	4.00	4.00	100	1997	1997	3	75	3,540	

LAND DESCRIPTION

TOTAL OB/XF 5,780

LN	USE CODE	CLS	LAND USE DESCRIPTION	CAP	RD	LOC ZONE	FRONT	DEPTH	TOT LND UTS	UNIT TYPE	DT	DPTH FACT	% COND	TOT ADJ	UNIT PRICE	ADJ UNIT PRICE	LAND VALUE	OTHER ADJUSTMENTS AND NOTES	YEAR	DENSITY	DECL	FRZ	YR	CONSRV
1	000100	C	SFR	100	0006	R2	140.00	210.00	140.00	FF		1.00	1.00	1.00	300.00	300.00	42,000							

REVIEW DATE 10/01/2018 BY TWA Total Acres: 0.00 Total Land Value: 42,000 Market: 0 Agricultural: 0 Common: 42,000 PRINTED 08/02/2023 BY SYS