PARCELS 1 & 2 OF SEC 8 LYING
E & N OF AMELIA ISL PKWY
(EX OR 265/82 & EX R/W'S & EX

CITY OF FERNANDINA BEACH
204 ASH STREET
FERNANDINA BEACH, FL 32034

2023

08-2N-28-0000-0001-0000

BUILDING CHARACTERISTICS

ELEMENT	CD	CONSTRUCTION
Exterior Wall	05	AVERAGE 100
Roof Structur	04	WOOD TRUSS 100
Roof Cover	12	MODULAR MT 100
Interior Wall	04	PLYWOOD 50
Interior Wall	07	NONE 50
Interior Floo	03	CONC FINSH 100
Ceiling	04	NONE 100
Air Condition	01	NONE 100
Heating Type	01	NONE 100
Fixtures		4 100
Frame	02	WOOD FRAME 100
Story Height		8 100
RMS		3 100
Stories	1.	1. 100
Units		0 100
BUD8 Adjustme	02	DIST FB 100
Occupancy	00	NONE 100
Quality	04	Quality Level 04

DOR CODE	8900	MUNICIPAL	
MAP NUM		MKT AREA	01
NEIGHBORHOOD/LOC	1010.00		

AREA TYPE	TOTAL GROSS AREA	PCT OF BASE	TOT ADJ AREA	SUBAREA MARKET VALUE
BAS	7,426	100	7,426	102,516
PTO	1,200	5	60	829
PTO	1,927	5	96	1,326
TOTALS	10,553		7,582	104,670

MARKET ADJUSTMENTS

TYPE	MDL	EFF. AREA	TOT ADJ PTS	EFF. BASE RATE	REPL. COST NEW	AYB	EYB	ECON	FNCT		NORM	% COND
2703	04	7,582	56.9250	27.61	209,339	1985	1985	0	0	0	50.00	50.00

2 GARAGE – 0% - 0 Heated Area: 7426 HX Base Yr

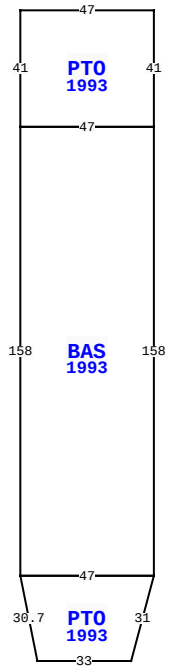

2800 BILL MELTON RD, FERNANDINA BEACH

BLD DATE	05/09/2022 KK	LGL DATE	
XF DATE		LAND DATE	05/09/2022 KK
INC DATE		AG DATE	

NASSAU COUNTY PROPERTY

PAGE 1 of 5 2

VALUATION SUMMARY

VALUATION BY		STANDARD
Tax Group: 2	Tax Dist:	
BUILDING MARKET VALUE		1,338,676
TOTAL MARKET OB/XF VALUE		2,043,115
TOTAL LAND VALUE - MARKET		22,733,250
TOTAL MARKET VALUE		26,115,041
SOH/AGL Deduction		19,747,840
ASSESSED VALUE		6,367,201
TOTAL EXEMPTION VALUE	04	6,367,201
BASE TAXABLE VALUE		0
TOTAL JUST VALUE		26,115,041
NCON VALUE		0
INCOME VALUE		
PREVIOUS YEAR MKT VALUE		25,600,927

PERMIT NUM	DESCRIPTION	AMT	ISSUED
20210190	PASS THROUGH WIND	0	05/07/2021
20200101	DRIVING RANGE	43,911	10/12/2020
20142276	CLUBHOUSE	33,000	10/23/2014
20141214	A/C	7,300	06/06/2014
20121117	A/C	32,200	06/13/2012
20111710	REMODEL	1,000	09/28/2011

SALES DATA

OFF RECORD Number	DATE	TYPE INST	Q U	V I	RSN CD	SALE PRICE

BUILDING NOTES

BUILDING DIMENSIONS

PTO=[YR=1993] W47S41BAS=[YR=1993] S158 PTO=[YR=1993] D30 R6 E33 U30 R8 W47$ E47N158W47$E47N41$.

EXTRA FEATURES

LN	OB/XF CODE	DESCRIPTION	BLD	CAP	L	W	UNITS	UT	Adj R	ADJ UNIT PRICE	ORIG COND	YEAR ON	YEAR ACTUAL	Q	% COND	OB/XF MKT VALUE	NOTES
1	0510	GARAGE WD-	0	0	72	42	3,024.00	SF	35.00	35.00	100	1970	1970	3	20	21,168	
2	0866	POOL FIBER	0	0	24	42	1,008.00	SF	72.00	72.00	100	1970	1970	3	20	14,515	
3	0803	ASPHALT C	0	0	0	0	47,790.00	SF	2.00	2.00	100	1980	1980	3	50	47,790	
4	0812	CONCRETE C	0	0	0	0	5,288.00	SF	4.00	4.00	100	1980	1980	3	35	7,403	
5	2503	GOLF CRS 3	0	0	0	0	18.00	UT	80,000.00	80,000.00	100	1960	1960	3	80	1,152,000	
7	6001	ROLLUP DR	0	0	0	15	1.00	UT	400.00	400.00	100	1970	1970	3	20	80	
8	0350	CARPORT WD	0	0	15	11	165.00	SF	13.00	13.00	100	2002	2002	3	21	450	
9	1123	CB 8"	0	0	54	0	162.00	SF	6.15	6.15	100	2002	2002	3	83	827	
10	1123	CB 8"	0	0	116	0	464.00	SF	6.15	6.15	100	2002	2002	3	83	2,368	
11	0812	CONCRETE C	0	0	0	0	1,121.00	SF	4.00	4.00	100	2002	2002	3	83	3,722	

TOTAL OB/XF 1,250,323

LAND DESCRIPTION

LN	USE CODE	CLS	LAND USE DESCRIPTION	CAP	RD	LOC ZONE	FRONT	DEPTH	TOT LND UTS	UNIT TYPE	DT	DPTH FACT	% COND	TOT ADJ	UNIT PRICE	ADJ UNIT PRICE	LAND VALUE	OTHER ADJUSTMENTS AND NOTES	YEAR	DENSITY	DECL	FRZ	YR	CONSRV
1	003800	C	GOLF CRS	0			0.00	0.00	303.11	AC		1.00	1.00	0.50	150,000.00	75,000.00	22,733,250							

REVIEW DATE 05/09/2022 BY KK Total Acres: 303.11 Total Land Value: 22,733,250 Market: 0 Agricultural: 0 Common: 22,733,250 PRINTED 08/02/2023 BY SYS

PARCELS 1 & 2 OF SEC 8 LYING
E & N OF AMELIA ISL PKWY
(EX OR 265/82 & EX R/W'S & EX

CITY OF FERNANDINA BEACH
204 ASH STREET
FERNANDINA BEACH, FL 32034

2023

08-2N-28-0000-0001-0000

BUILDING CHARACTERISTICS

ELEMENT	CD	CONSTRUCTION
Exterior Wall	25	MOD METAL 100
Roof Structur	10	STEEL FRME 100
Roof Cover	12	MODULAR MT 100
Interior Wall	07	NONE 100
Interior Floo	03	CONC FINSH 100
Ceiling	04	NONE 100
Air Condition	01	NONE 100
Heating Type	01	NONE 100
Plumbing		5 100
Frame	05	STEEL 100
Story Height		11 100
RMS		2 100
Stories	1.	1. 100
Class	00	. 100
Units		0 100
BUD8 Adjustme	02	DIST FB 100
Occupancy	00	NONE 100
Quality	03	Quality Level 03
DOR CODE	8900	MUNICIPAL
MAP NUM		MKT AREA 01
NEIGHBORHOOD/LOC	1010.00	

AREA TYPE	TOTAL GROSS AREA	PCT OF BASE	TOT ADJ AREA	SUBAREA MARKET VALUE
AOF	210	185	388	7,584
BAS	3,790	100	3,790	74,076
PTO	432	5	22	430
TOTALS	4,432		4,200	82,089

MARKET ADJUSTMENTS

TYPE	MDL	EFF. AREA	TOT ADJ PTS	EFF. BASE RATE	REPL. COST NEW	AYB	EYB	ECON	FNCT		NORM	% COND
4807	06	4,200	82.2970	39.09	164,178	1998	1998	0	0	0	50.00	50.00

3 PREFAB MTL - 0% - 0 Heated Area: 4000 HX Base Yr

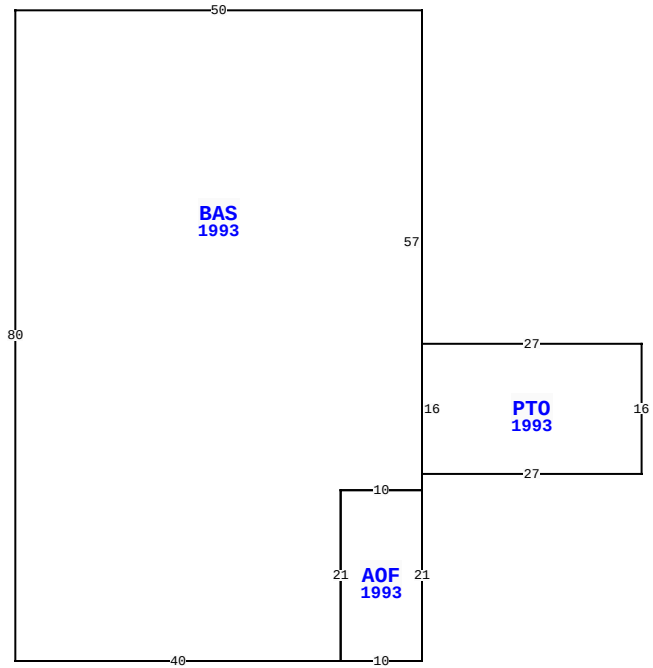

BLD DATE	05/09/2022 KK	LGL DATE	
XF DATE		LAND DATE	05/09/2022 KK
INC DATE		AG DATE	

2800 BILL MELTON RD, FERNANDINA BEACH

NASSAU COUNTY PROPERTY

PAGE 2 of 5 2

VALUATION SUMMARY

VALUATION BY		STANDARD
Tax Group: 2	Tax Dist:	
BUILDING MARKET VALUE		1,338,676
TOTAL MARKET OB/XF VALUE		2,043,115
TOTAL LAND VALUE - MARKET		22,733,250
TOTAL MARKET VALUE		26,115,041
SOH/AGL Deduction		19,747,840
ASSESSED VALUE		6,367,201
TOTAL EXEMPTION VALUE	04	6,367,201
BASE TAXABLE VALUE		0
TOTAL JUST VALUE		26,115,041
NCON VALUE		0
INCOME VALUE		
PREVIOUS YEAR MKT VALUE		25,600,927

PERMIT NUM	DESCRIPTION	AMT	ISSUED
20111431	REPAIR/RRF	1,000	08/19/2011
20111398	OTHER	89,000	08/16/2011
20090279	REPAIR/RRF	20,251	03/03/2009
B990223	NEW CONSTR	100,000	04/14/1999

SALES DATA

OFF RECORD Number	DATE	TYPE INST	Q / U	V / I	RSN CD	SALE PRICE

BUILDING NOTES

BUILDING DIMENSIONS

BAS=[YR=1993] W50 S80 E40 AOF=[YR=1993] E10 N21 W10 S21$
N21E10N2 PTO=[YR=1993] E27N16W27S16$N57$.

EXTRA FEATURES

LN	OB/XF CODE	DESCRIPTION	BLD	CAP	L	W	UNITS	UT	Adj R	ADJ UNIT PRICE	ORIG COND	YEAR ON	YEAR ACTUAL	Q	% COND	OB/XF MKT VALUE	NOTES
12	0812	CONCRETE C	0	0	0	0	1,832.00	SF	4.00	4.00	100	2002	2002	3	83	6,082	
13	0424	CL FNC 6'	0	0	0	0	126.00	LF	20.00	20.00	100	1970	1970	3	20	504	
14	0443	STK FNC 6'	0	0	0	0	156.00	LF	10.00	10.00	100	1980	1980	3	20	312	
15	0400	CONC CURB	0	0	0	0	2,630.00	LF	15.00	15.00	100	1999	1999	3	84	33,138	
16	0803	ASPHALT C	0	0	0	0	55,337.00	SF	2.00	2.00	100	1999	1999	3	50	55,337	
17	0812	CONCRETE C	0	0	0	0	5,541.00	SF	4.00	4.00	100	1999	1999	3	79	17,510	
18	0855	CONC PAVER	0	0	0	0	62.00	SF	10.00	10.00	100	1999	1999	3	79	490	
19	0402	CONC BUMPE	0	0	0	0	53.00	UT	25.00	25.00	100	1999	1999	3	84	1,113	
20	4950	BOLLARD	0	0	0	0	5.00	UT	100.00	100.00	100	1999	1999	3	100	500	
21	1123	CB 8"	0	0	30	0	240.00	SF	6.15	6.15	100	1999	1999	3	79	1,166	

TOTAL OB/XF 116,152

LAND DESCRIPTION

LN	USE CODE	CLS	LAND USE DESCRIPTION	CAP	RD	LOC ZONE	FRONT	DEPTH	TOT LND UTS	UNIT TYPE	DT	DPTH FACT	% COND	TOT ADJ	UNIT PRICE	ADJ UNIT PRICE	LAND VALUE	OTHER ADJUSTMENTS AND NOTES	YEAR	DENSITY	DECL	FRZ	YR	CONSRV

REVIEW DATE 05/09/2022 BY KK Total Acres: 303.11 Total Land Value: 22,733,250 Market: 0 Agricultural: 0 Common: 22,733,250 PRINTED 08/02/2023 BY SYS

PARCELS 1 & 2 OF SEC 8 LYING
E & N OF AMELIA ISL PKWY
(EX OR 265/82 & EX R/W'S & EX

CITY OF FERNANDINA BEACH
204 ASH STREET
FERNANDINA BEACH, FL 32034

2023

08-2N-28-0000-0001-0000

BUILDING CHARACTERISTICS

ELEMENT	CD	CONSTRUCTION
Exterior Wall	10	ABOVE AVG 100
Roof Structur	04	WOOD TRUSS 100
Roof Cover	03	COMP SHNGL 100
Interior Wall	05	DRYWALL 70
Interior Wall	06	CUST PANEL 30
Interior Floo	14	CARPET 80
Interior Floo	15	HARDTILE 20
Ceiling	02	F.NOT SUS 100
Air Condition	03	CENTRAL 100
Heating Type	04	AIR DUCTED 100
Fixtures		29 100
Frame	02	WOOD FRAME 100
Story Height		10 100
RMS		14 100
Stories	1.	1. 100
Units		0 100
Occupancy	00	NONE 100
Quality	03	Quality Level 03
DOR CODE	8900	MUNICIPAL
MAP NUM		MKT AREA 01
NEIGHBORHOOD/LOC	1010.00	

AREA TYPE	TOTAL GROSS AREA	PCT OF BASE	TOT ADJ AREA	SUBAREA MARKET VALUE
BAS	7,376	100	7,376	786,510
BRA	126	110	139	14,822
FCP	600	30	180	19,194
FOP	42	30	13	1,387
FOP	96	30	29	3,092
FOP	616	30	185	19,727
FOP	629	30	189	20,153
FOP	792	30	238	25,378
KTA	969	110	1,066	113,668
PTO	312	5	16	1,706
TOTALS	12,910		9,945	1,060,444

MARKET ADJUSTMENTS

TYPE	MDL	EFF. AREA	TOT ADJ PTS	EFF. BASE RATE	REPL. COST NEW	AYB	EYB	ECON	FNCT		NORM	% COND
0303	04	9,945	107.2170	119.81	1,191,510	1999	1999	0	0	0	11.00	89.00

4 CLUB HOUSE - 0% - 0 Heated Area: 8886 HX Base Yr

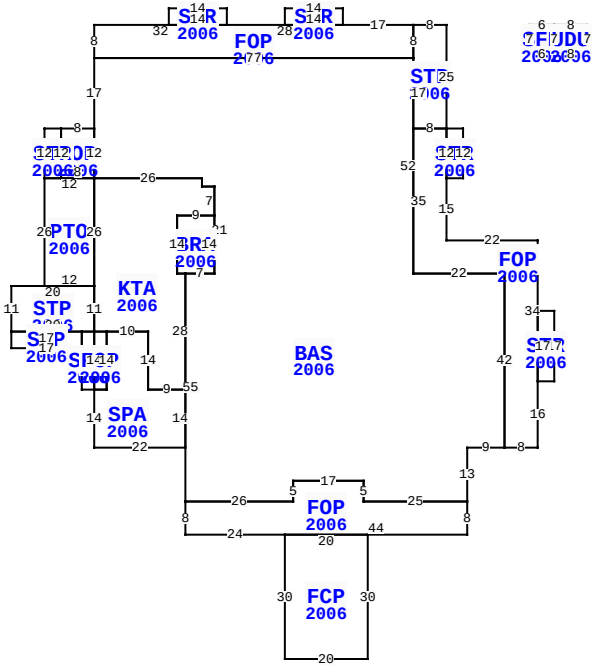

** This building has 22 Sub-Areas

2800 BILL MELTON RD, FERNANDINA BEACH

BLD DATE	05/09/2022 KK	LGL DATE	
XF DATE		LAND DATE	05/09/2022 KK
INC DATE		AG DATE	

NASSAU COUNTY PROPERTY

PAGE 3 of 5 2

VALUATION SUMMARY

VALUATION BY		STANDARD
Tax Group: 2	Tax Dist:	
BUILDING MARKET VALUE		1,338,676
TOTAL MARKET OB/XF VALUE		2,043,115
TOTAL LAND VALUE - MARKET		22,733,250
TOTAL MARKET VALUE		26,115,041
SOH/AGL Deduction		19,747,840
ASSESSED VALUE		6,367,201
TOTAL EXEMPTION VALUE	04	6,367,201
BASE TAXABLE VALUE		0
TOTAL JUST VALUE		26,115,041
NCON VALUE		0
INCOME VALUE		
PREVIOUS YEAR MKT VALUE		25,600,927

PERMIT NUM	DESCRIPTION	AMT	ISSUED

SALES DATA

OFF RECORD Number	DATE	TYPE INST	Q U	V I	RSN CD	SALE PRICE

BUILDING NOTES

EXTRA FEATURES

LN	OB/XF CODE	DESCRIPTION	BLD	CAP	L	W	UNITS	UT	Adj R	ADJ UNIT PRICE	ORIG COND	YEAR ON	YEAR ACTUAL	Q	% COND	OB/XF MKT VALUE	NOTES
22	1123	CB 8"	0	0	15	0	150.00	SF	6.15	6.15	100	1999	1999	3	79	729	
23	0510	GARAGE WD-	0	0	22	14	308.00	SF	35.00	35.00	100	2006	2006	3	48	5,174	
24	2503	GOLF CRS 3	0	0	0	0	1.00	UT	32,000.00	32,000.00	100	1975	1975	3	80	25,600	
25	2503	GOLF CRS 3	0	0	0	0	9.00	UT	80,000.00	80,000.00	100	1973	1973	3	80	576,000	
26	0803	ASPHALT C	0	0	0	0	33,534.00	SF	2.00	2.00	100	1973	1973	3	50	33,534	
27	0812	CONCRETE C	0	0	0	0	28,768.00	SF	4.00	4.00	100	1973	1973	3	25	28,768	
28	0810	CONCRETE A	0	0	12	12	144.00	SF	6.50	6.50	100	1973	1973	3	25	234	
29	0350	CARPORT WD	0	0	12	16	192.00	SF	8.19	8.19	100	1973	1973	3	20	314	
30	0810	CONCRETE A	0	0	66	6	396.00	SF	6.50	6.50	100	2021	2021	3	100	2,574	
31	0811	CONCRETE B	0	0	0	0	714.00	SF	5.20	5.20	100	2021	2021	3	100	3,713	

TOTAL OB/XF 676,640

BUILDING DIMENSIONS

STP=[YR=2006] W8FOP=[YR=2006] W17STR=[YR=2006]
N4W14S4E14$W28STR=[YR=2006] N4W14S4
E14$W32S8E77N8$S8BAS=[YR=2006] W77 S17FOP=[YR=2006]
W8STR=[YR=2006] W4S12E4 N12$S12E8N12$S12PTO=[YR=2006] W12S26
E12N26$KTA=[YR=2006] S26STP=[YR=2006] W20
S11E20N11$S11STP=[YR=2006] W3 STP=[YR=2006]
W17S4E17N4$S14E3N14$ FOP=[YR=2006] S14E3N14W3$E3SPA=[YR=2006]
S14W3S14E22N14W9N14W10$E10S14 E9N28BRA=[YR=2006]
E7N14W9S14E2$W2 N14E9N7W3N2W26$E26S2E3S21W7S55 FOP=[YR=2006]
S8E24FCP=[YR=2006] S30E20N30 W20$E44N8W25N5W17S5W26$E26N5
E17S5E25N13E9N42W22N52$S17E8 FOP=[YR=2006] W8S35E22S42E8N16
STR=[YR=2006] E4N17W4S17$N34W22N15 STR=[YR=2006]

LAND DESCRIPTION

LN	USE CODE	CLS	LAND USE DESCRIPTION	CAP	RD	LOC ZONE	FRONT	DEPTH	TOT LND UTS	UNIT TYPE	DT	DPTH FACT	% COND	TOT ADJ	UNIT PRICE	ADJ UNIT PRICE	LAND VALUE	OTHER ADJUSTMENTS AND NOTES	YEAR	DENSITY	DECL	FRZ	YR	CONSRV

REVIEW DATE 05/09/2022 BY KK Total Acres: 303.11 Total Land Value: 22,733,250 Market: 0 Agricultural: 0 Common: 22,733,250 PRINTED 08/02/2023 BY SYS

PARCELS 1 & 2 OF SEC 8 LYING
E & N OF AMELIA ISL PKWY
(EX OR 265/82 & EX R/W'S & EX

CITY OF FERNANDINA BEACH
204 ASH STREET
FERNANDINA BEACH, FL 32034

2023

08-2N-28-0000-0001-0000

BUILDING CHARACTERISTICS

ELEMENT	CD	CONSTRUCTION
Exterior Wall	15	CONC BLOCK 100
Roof Structur	04	WOOD TRUSS 100
Roof Cover	03	COMP SHNGL 100
Interior Wall	01	MINIMUM 100
Interior Floo	03	CONC FINSH 100
Ceiling	02	F.NOT SUS 100
Air Condition	01	NONE 100
Heating Type	01	NONE 100
Fixtures		6 100
Frame	03	MASONRY 100
Story Height		8 100
RMS		0 100
Stories	1.	1. 100
Units		0 100
Occupancy	00	NONE 100
Quality	03	Quality Level 03
DOR CODE	8900	MUNICIPAL
MAP NUM		MKT AREA 01
NEIGHBORHOOD/LOC	1010.00	

AREA TYPE	TOTAL GROSS AREA	PCT OF BASE	TOT ADJ AREA	SUBAREA MARKET VALUE
BAS	140	100	140	8,371
FOP	148	30	44	2,631
PTO	120	5	6	359
PTO	120	5	6	359
UOP	132	20	26	1,555
TOTALS	660		222	13,274

MARKET ADJUSTMENTS

TYPE	MDL	EFF. AREA	TOT ADJ PTS	EFF. BASE RATE	REPL. COST NEW	AYB	EYB	ECON	FNCT		NORM	% COND
3803	04	222	68.0400	119.58	26,547	1973	1973	0	0	0	50.00	50.00

5 RSTRM BLDG – 0% - 0 Heated Area: 140 HX Base Yr

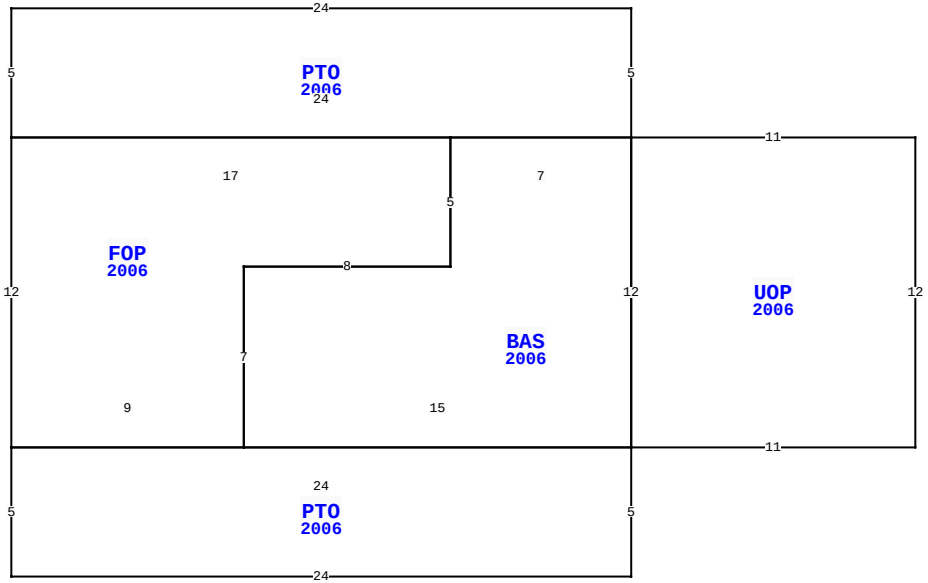

2800 BILL MELTON RD, FERNANDINA BEACH

BLD DATE	05/09/2022 KK	LGL DATE	
XF DATE		LAND DATE	05/09/2022 KK
INC DATE		AG DATE	

NASSAU COUNTY PROPERTY

PAGE 4 of 5 2

VALUATION SUMMARY

VALUATION BY		STANDARD
Tax Group: 2	Tax Dist:	
BUILDING MARKET VALUE		1,338,676
TOTAL MARKET OB/XF VALUE		2,043,115
TOTAL LAND VALUE - MARKET		22,733,250
TOTAL MARKET VALUE		26,115,041
SOH/AGL Deduction		19,747,840
ASSESSED VALUE		6,367,201
TOTAL EXEMPTION VALUE	04	6,367,201
BASE TAXABLE VALUE		0
TOTAL JUST VALUE		26,115,041
NCON VALUE		0
INCOME VALUE		
PREVIOUS YEAR MKT VALUE		25,600,927

PERMIT NUM	DESCRIPTION	AMT	ISSUED

SALES DATA

OFF RECORD Number	DATE	TYPE INST	Q / U	V / I	RSN CD	SALE PRICE

BUILDING NOTES

BUILDING DIMENSIONS

UOP=[YR=2006] W11PTO=[YR=2006] N5W24S5E24$ BAS=[YR=2006] W7FOP=[YR=2006] W17S12 PTO=[YR=2006] S5E24N5W24$E9N7E8N5$S5 W8S7E15N12$S12E11N12$.

EXTRA FEATURES

LN	OB/XF CODE	DESCRIPTION	BLD	CAP	L	W	UNITS	UT	Adj R	ADJ UNIT PRICE	ORIG COND	YEAR ON	YEAR ACTUAL	Q	% COND	OB/XF MKT VALUE	NOTES

LAND DESCRIPTION

TOTAL OB/XF 0

LN	USE CODE	CLS	LAND USE DESCRIPTION	CAP	RD	LOC ZONE	FRONT	DEPTH	TOT LND UTS	UNIT TYPE	DT	DPTH FACT	% COND	TOT ADJ	UNIT PRICE	ADJ UNIT PRICE	LAND VALUE	OTHER ADJUSTMENTS AND NOTES	YEAR	DENSITY	DECL	FRZ	YR	CONSRV

REVIEW DATE 05/09/2022 BY KK Total Acres: 303.11 Total Land Value: 22,733,250 Market: 0 Agricultural: 0 Common: 22,733,250 PRINTED 08/02/2023 BY SYS

PARCELS 1 & 2 OF SEC 8 LYING
E & N OF AMELIA ISL PKWY
(EX OR 265/82 & EX R/W'S & EX

CITY OF FERNANDINA BEACH
204 ASH STREET
FERNANDINA BEACH, FL 32034

2023

08-2N-28-0000-0001-0000

NASSAU COUNTY PROPERTY

BUILDING CHARACTERISTICS

ELEMENT	CD	CONSTRUCTION
Exterior Wall	10	ABOVE AVG 100
Roof Structur	02	SHED 100
Roof Cover	03	COMP SHNGL 100
Interior Wall	05	DRYWALL 100
Interior Floo	03	CONC FINSH 100
Ceiling	02	F.NOT SUS 100
Air Condition	01	NONE 100
Heating Type	01	NONE 100
Fixtures		0 100
Frame	02	WOOD FRAME 100
Story Height		13 100
RMS		1 100
Stories	1.	1. 100
Units		0 100
Occupancy	00	NONE 100
Quality	04	Quality Level 04

DOR CODE	8900	MUNICIPAL	
MAP NUM		MKT AREA	01
NEIGHBORHOOD/LOC	1010.00		

AREA TYPE	TOTAL GROSS AREA	PCT OF BASE	TOT ADJ AREA	SUBAREA MARKET VALUE
AOF	475	100	475	10,586
BAS	3,025	100	3,025	67,413
UOP	15	20	3	67
UOP	15	20	3	67
UOP	15	20	3	67
TOTALS	3,545		3,509	78,199

MARKET ADJUSTMENTS

TYPE	MDL	EFF. AREA	TOT ADJ PTS	EFF. BASE RATE	REPL. COST NEW	AYB	EYB	ECON	FNCT		NORM	% COND
8600	04	3,509	94.7641	22.74	79,795	2021	2021	0	0	0	2.00	98.00

6 BARNS – 0% - 0 Heated Area: 3500 HX Base Yr

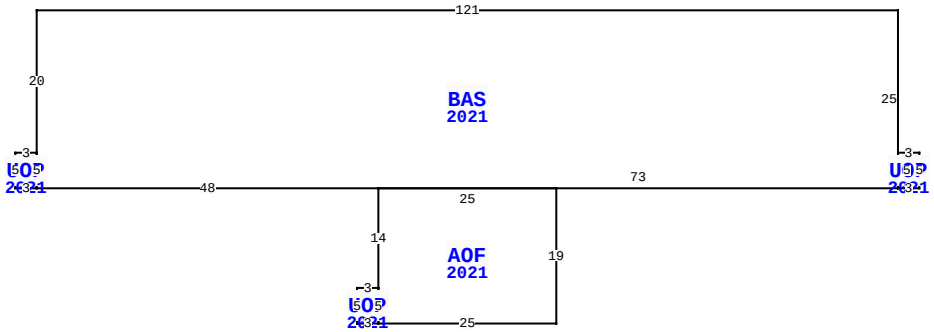

BLD DATE	05/09/2022	KK	LGL DATE
XF DATE			LAND DATE 05/09/2022 KK
INC DATE			AG DATE

2800 BILL MELTON RD, FERNANDINA BEACH

VALUATION SUMMARY

VALUATION BY		STANDARD
Tax Group: 2	Tax Dist:	
BUILDING MARKET VALUE		1,338,676
TOTAL MARKET OB/XF VALUE		2,043,115
TOTAL LAND VALUE - MARKET		22,733,250
TOTAL MARKET VALUE		26,115,041
SOH/AGL Deduction		19,747,840
ASSESSED VALUE		6,367,201
TOTAL EXEMPTION VALUE	04	6,367,201
BASE TAXABLE VALUE		0
TOTAL JUST VALUE		26,115,041
NCON VALUE		0
INCOME VALUE		
PREVIOUS YEAR MKT VALUE		25,600,927

PERMIT NUM	DESCRIPTION	AMT	ISSUED

SALES DATA

OFF RECORD Number	DATE	TYPE INST	Q / U	V / I	RSN CD	SALE PRICE

BUILDING NOTES

BUILDING DIMENSIONS

BAS=[YR=2021] W121 S20 UOP=[YR=2021] W3 S5 E3 N5$ S5 E48
AOF=[YR=2021] S14 UOP=[YR=2021] W3 S5 E3 N5$ S5 E25 N19
W25$ E73 UOP=[YR=2021] E3 N5 W3 S5$ N25$.

EXTRA FEATURES

LN	OB/XF CODE	DESCRIPTION	BLD	CAP	L	W	UNITS	UT	Adj R	ADJ UNIT PRICE	ORIG COND	YEAR ON	YEAR ACTUAL	Q	% COND	OB/XF MKT VALUE	NOTES

LAND DESCRIPTION

TOTAL OB/XF 0

LN	USE CODE	CLS	LAND USE DESCRIPTION	CAP	RD	LOC ZONE	FRONT	DEPTH	TOT LND UTS	UNIT TYPE	DT	DPTH FACT	% COND	TOT ADJ	UNIT PRICE	ADJ UNIT PRICE	LAND VALUE	OTHER ADJUSTMENTS AND NOTES	YEAR	DENSITY	DECL	FRZ	YR	CONSRV

REVIEW DATE 05/09/2022 BY KK Total Acres: 303.11 Total Land Value: 22,733,250 Market: 0 Agricultural: 0 Common: 22,733,250 PRINTED 08/02/2023 BY SYS