PT OF N1/2 OF SW1/4
PT OR 683/1529 & 1533

HALL ARTHUR H JR LIVING TRUST/HALL ARTHUR H HALL J
1384 CORTEZ ROAD
BRYCEVILLE, FL 32009

2023

08-1S-23-0000-0005-0010

NASSAU COUNTY PROPERTY

BUILDING CHARACTERISTICS

ELEMENT	CD	CONSTRUCTION
Exterior Wall	08	WD ON PLY 50
Exterior Wall	19	COMMON BRK 50
Roof Structur	03	GABLE/HIP 100
Roof Cover	12	MODULAR MT 100
Interior Wall	04	PLYWOOD 50
Interior Wall	05	DRYWALL 50
Interior Floo	11	CLAY TILE 80
Interior Floo	08	SHT VINYL 20
Air Condition	03	CENTRAL 100
Heating Type	04	AIR DUCTED 100
Bedrooms		2 100
Bathrooms		2 100
Frame	02	WOOD FRAME 100
Stories	2.	2. 100
Units		0 100
BUD8 Adjustme	06	DIST 1D 100
Occupancy	00	NONE 100
Quality	04	Quality Level 04
DOR CODE	5000	IMPROVED AG
MAP NUM		MKT AREA 09
NEIGHBORHOOD/LOC	9001.00	

AREA TYPE	TOTAL GROSS AREA	PCT OF BASE	TOT ADJ AREA	SUBAREA MARKET VALUE
BAS	1,080	100	1,080	114,314
FCP	460	25	115	12,172
FOP	40	30	12	1,270
FOP	288	30	86	9,103
FOP	288	30	86	9,103
FST	260	55	143	15,136
FST	80	55	44	4,657
FUS	600	100	600	63,508
FUS	368	100	368	38,951
FUS	21	100	21	2,223
TOTALS	3,485		2,555	270,437

MARKET ADJUSTMENTS

TYPE	MDL	EFF. AREA	TOT ADJ PTS	EFF. BASE RATE	REPL. COST NEW	AYB	EYB	ECON	FNCT		NORM	% COND
0900	01	2,555	120.8592	143.52	366,694	1980	1987	0	0	0	26.25	73.75

1 SNGL FAM – 100% - 0 Heated Area: 2069 HX Base Yr

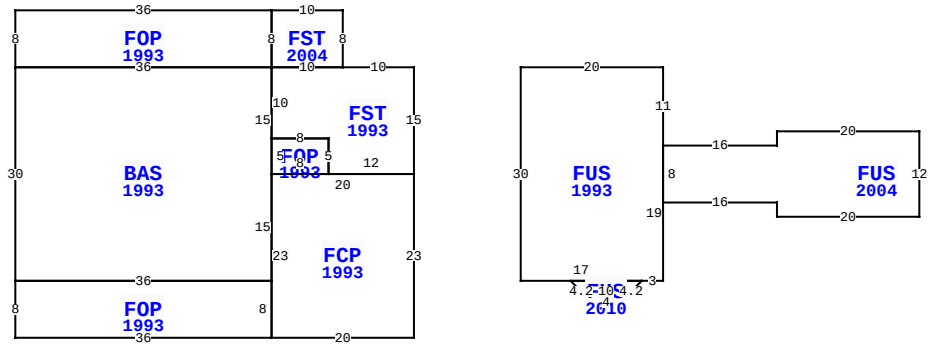

1384 CORTEZ RD, BRYCEVILLE

BLD DATE		LGL DATE	
XF DATE		LAND DATE	06/13/2023 MLU
INC DATE		AG DATE	

VALUATION SUMMARY

VALUATION BY		STANDARD
Tax Group: 6	Tax Dist:	
BUILDING MARKET VALUE		270,437
TOTAL MARKET OB/XF VALUE		113,604
TOTAL LAND VALUE - MARKET		331,000
TOTAL MARKET VALUE		443,841
SOH/AGL Deduction		206,220
ASSESSED VALUE		237,621
TOTAL EXEMPTION VALUE	HX HB	50,000
BASE TAXABLE VALUE		187,621
TOTAL JUST VALUE		715,041
NCON VALUE		0
INCOME VALUE		
PREVIOUS YEAR MKT VALUE		348,424

PERMIT NUM	DESCRIPTION	AMT	ISSUED
R1514585	REPAIR/RRF	0	08/31/2015
R12093	REPAIR/RRF	3,000	09/01/2009
B22566	REMODEL	136,515	06/01/2009

SALES DATA

OFF RECORD Number	DATE	TYPE INST	Q U	V I	RSN CD	SALE PRICE
0683/1533	6/29/1993	WD	U	I	01	100
GRANTOR: HALL LINDA & ARTHUR						
GRANTEE: HALL LINDA TRUSTEE						
0683/1529	6/29/1993	WD	U	I	01	100
GRANTOR: HALL ARTHUR JR & L M						
GRANTEE: HALL ARTHUR JR TRTE						

BUILDING NOTES

BUILDING DIMENSIONS

FST=[YR=1993] W10FST=[YR=2004] N8 W10 S8 E10 $ W10
FOP=[YR=1993] N8 W36 S8 BAS=[YR=1993] S30 FOP=[YR=1993] S8
E36 FCP=[YR=1993] E20 N23 W20 S23 $ N8 W36 $ E36 N15
FOP=[YR=1993] E8 N5 W8 S5$ N15 W36 $ E36 $ S10 E8 S5 E12 N15
$ PTR= E15 FUS=[YR=1993] E20 S11 FUS=[YR=2004] E16 N2 E20
S12 W20 N2 W16 N8 $ S19 W3 FUS=[YR=2010] D3 L3 W4 U3 L3
E10$ W17 N30 $ W15 $.

EXTRA FEATURES

LN	OB/XF CODE	DESCRIPTION	BLD	CAP	L	W	UNITS	UT	Adj R	ADJ UNIT PRICE	ORIG COND	YEAR ON	YEAR ACTUAL	Q	% COND	OB/XF MKT VALUE	NOTES
2	0812	CONCRETE C	0	100	23	52	1,196.00	SF	4.00	4.00	100	1983	1983	3	44	2,105	
3	0204	BARN MTL 1	0	100	48	48	2,304.00	SF	16.00	16.00	100	1990	1990	3	20	7,373	
4	0500	FP-PRE FAB	0	100	0	0	1.00	UT	3,500.00	3,500.00	100	1980	1980	3	49	1,715	
5	0510	GARAGE WD-	0	100	75	32	2,400.00	SF	35.00	35.00	100	1995	1995	3	24	20,160	
6	0861	POOL GUNIT	0	100	0	0	578.00	SF	85.00	85.00	100	2002	2002	3	32	15,722	
7	0845	KOOL DECK	0	100	0	0	794.00	SF	7.25	7.25	100	2002	2002	3	83	4,778	
8	0810	CONCRETE A	0	100	0	0	376.00	SF	6.50	6.50	100	2002	2002	3	83	2,029	
9	0462	ST/AL FNC	0	100	0	0	940.00	SF	10.00	10.00	100	2002	2002	3	32	3,008	
10	0871	POOL HTR R	0	100	0	0	1.00	UT	2,000.00	2,000.00	100	2002	2002	3	21	420	
11	0463	FENCE GATE	0	100	0	0	70.00	UT	600.00	600.00	100	2002	2002	3	61	25,620	

TOTAL OB/XF 82,930

LAND DESCRIPTION

LN	USE CODE	CLS	LAND USE DESCRIPTION	CAP	RD	LOC ZONE	FRONT	DEPTH	TOT LND UTS	UNIT TYPE	DT	DPTH FACT	% COND	TOT ADJ	UNIT PRICE	ADJ UNIT PRICE	LAND VALUE	OTHER ADJUSTMENTS AND NOTES	YEAR	DENSITY	DECL	FRZ	YR	CONSRV
1	005000	C	RURAL HOME	100	0005	OR	0.00	0.00	1.70	AC		1.00	1.00	1.00	30,000.00	30,000.00	51,000							
2	006000	A	PAST1/HAY	0			0.00	0.00	20.00	AC		1.00	1.00	1.00	440.00	440.00	8,800							
3	009910	M	MKT.VAL.AG	0			0.00	0.00	20.00	AC		1.00	1.00	1.00	14,000.00	14,000.00	280,000							

REVIEW DATE 08/03/2021 BY TWA Total Acres: 21.70 Total Land Value: 59,800 Market: 280,000 Agricultural: 8,800 Common: 51,000 PRINTED 08/02/2023 BY SYS

PT OF N1/2 OF SW1/4
PT OR 683/1529 & 1533

HALL ARTHUR H JR LIVING TRUST/HALL ARTHUR H HALL J
1384 CORTEZ ROAD
BRYCEVILLE, FL 32009

2023

08-1S-23-0000-0005-0010

NASSAU COUNTY PROPERTY

BUILDING CHARACTERISTICS

ELEMENT	CD	CONSTRUCTION

DOR CODE	5000	IMPROVED AG	
MAP NUM		MKT AREA	09
NEIGHBORHOOD/LOC	9001.00		

AREA TYPE	TOTAL GROSS AREA	PCT OF BASE	TOT ADJ AREA	SUBAREA MARKET VALUE
TOTALS				

MARKET ADJUSTMENTS

TYPE	MDL	EFF. AREA	TOT ADJ PTS	EFF. BASE RATE	REPL. COST NEW	AYB	EYB	ECON	FNCT		NORM	% COND

VALUATION SUMMARY

VALUATION BY		STANDARD
Tax Group: 6	Tax Dist:	
BUILDING MARKET VALUE		270,437
TOTAL MARKET OB/XF VALUE		113,604
TOTAL LAND VALUE - MARKET		331,000
TOTAL MARKET VALUE		443,841
SOH/AGL Deduction		206,220
ASSESSED VALUE		237,621
TOTAL EXEMPTION VALUE	HX HB	50,000
BASE TAXABLE VALUE		187,621
TOTAL JUST VALUE		715,041
NCON VALUE		0
INCOME VALUE		
PREVIOUS YEAR MKT VALUE		348,424

PERMIT NUM	DESCRIPTION	AMT	ISSUED

SALES DATA

OFF RECORD Number	DATE	TYPE INST	Q U /	V I /	RSN CD	SALE PRICE
0683/1533	6/29/1993	WD	U	I	01	100
GRANTOR: HALL LINDA & ARTHUR						
GRANTEE: HALL LINDA TRUSTEE						
0683/1529	6/29/1993	WD	U	I	01	100
GRANTOR: HALL ARTHUR JR & L M						
GRANTEE: HALL ARTHUR JR TRTE						

BLD DATE		LGL DATE	
XF DATE		LAND DATE	06/13/2023 MLU
INC DATE		AG DATE	

BUILDING NOTES

BUILDING DIMENSIONS

EXTRA FEATURES

LN	OB/XF CODE	DESCRIPTION	BLD	CAP	L	W	UNITS	UT	Adj R	ADJ UNIT PRICE	ORIG COND	YEAR ON	YEAR ACTUAL	Q	% COND	OB/XF MKT VALUE	NOTES
12	0525	GAZEBO	0	100	0	0	1.00	UT	5,000.00	5,000.00	100	2002	2002	3	32	1,600	
13	0681	POLE SHED	0	100	36	12	432.00	SF	15.00	15.00	100	2002	2002	3	32	2,074	
14	0681	POLE SHED	0	100	50	40	2,000.00	SF	15.00	15.00	100	2018	2018	3	90	27,000	

LAND DESCRIPTION

TOTAL OB/XF 30,674

LN	USE CODE	CLS	LAND USE DESCRIPTION	CAP	RD	LOC ZONE	FRONT	DEPTH	TOT LND UTS	UNIT TYPE	DT	DPTH FACT	% COND	TOT ADJ	UNIT PRICE	ADJ UNIT PRICE	LAND VALUE	OTHER ADJUSTMENTS AND NOTES	YEAR	DENSITY	DECL	FRZ	YR	CONSRV

REVIEW DATE 08/03/2021 BY TWA Total Acres: 21.70 Total Land Value: 59,800 Market: 280,000 Agricultural: 8,800 Common: 51,000 PRINTED 08/02/2023 BY SYS