PT OF E1/2 OF NW1/4
IN OR 2498/1155

MCNEAL ROY D JR & ASHLEY G
1241 DB HICKS RD
BRYCEVILLE, FL 32009

2023

08-1S-23-0000-0002-0040

NASSAU COUNTY PROPERTY

BUILDING CHARACTERISTICS

ELEMENT	CD	CONSTRUCTION
Exterior Wall	20	FACE BRICK 100
Roof Structur	03	GABLE/HIP 100
Roof Cover	03	COMP SHNGL 100
Interior Wall	05	DRYWALL 100
Interior Floo	14	CARPET 90
Interior Floo	08	SHT VINYL 10
Air Condition	03	CENTRAL 100
Heating Type	04	AIR DUCTED 100
Bedrooms		4 100
Bathrooms		3 100
Frame	02	WOOD FRAME 100
Stories	1.	1. 100
Units		0 100
Occupancy	00	NONE 100
Quality	01	Quality Level 01
DOR CODE	0100	SINGLE FAMILY
MAP NUM		MKT AREA 09
NEIGHBORHOOD/LOC	9001.00	

AREA TYPE	TOTAL GROSS AREA	PCT OF BASE	TOT ADJ AREA	SUBAREA MARKET VALUE
BAS	2,086	100	2,086	184,289
BAS	418	100	418	36,929
FCP	504	25	126	11,132
FOP	12	30	4	353
FST	60	55	33	2,915
UEP	294	60	176	15,549
TOTALS	3,374		2,843	251,167

MARKET ADJUSTMENTS

TYPE	MDL	EFF. AREA	TOT ADJ PTS	EFF. BASE RATE	REPL. COST NEW	AYB	EYB	ECON	FNCT		NORM	% COND
0900	01	2,843	94.1760	111.83	317,933	1994	1994	0	0	0	21.00	79.00

1 SNGL FAM – 100% - 2023 Heated Area: 2504 HX Base Yr 2023

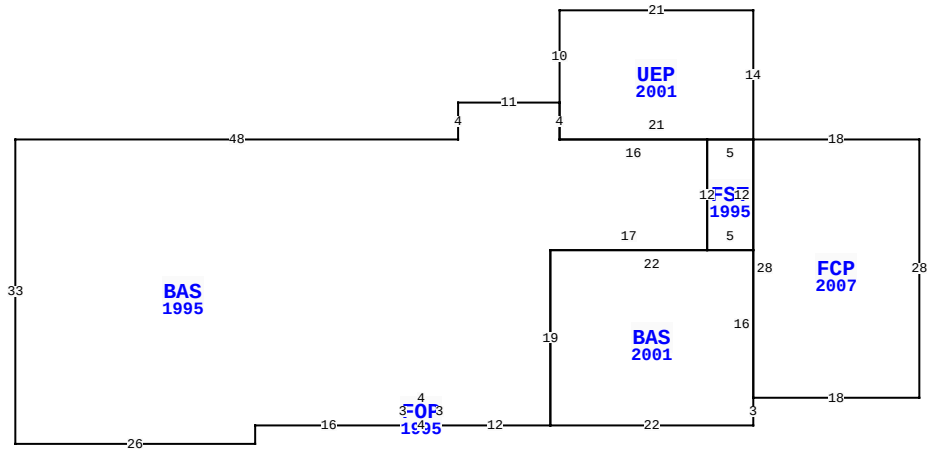

1241 DB HICKS RD, BRYCEVILLE

BLD DATE		LGL DATE	
XF DATE		LAND DATE	06/16/2023 MLU
INC DATE		AG DATE	

NASSAU COUNTY PROPERTY — VALUATION SUMMARY

VALUATION BY		STANDARD
Tax Group: 6	Tax Dist:	
BUILDING MARKET VALUE		251,167
TOTAL MARKET OB/XF VALUE		28,159
TOTAL LAND VALUE - MARKET		95,000
TOTAL MARKET VALUE		374,326
SOH/AGL Deduction		61,417
ASSESSED VALUE		312,909
TOTAL EXEMPTION VALUE	HX HB	50,000
BASE TAXABLE VALUE		262,909
TOTAL JUST VALUE		374,326
NCON VALUE		0
INCOME VALUE		
PREVIOUS YEAR MKT VALUE		298,163

PERMIT NUM	DESCRIPTION	AMT	ISSUED
E0413021	GARAGE	75	01/06/2004
B00	NEW CONSTR	75,152	06/01/2000
94740	NEW CONSTR	75,152	05/01/1994
8208	MH MOVE-ON	15,700	06/18/1990

SALES DATA

OFF RECORD Number	DATE	TYPE INST	Q U	V I	RSN CD	SALE PRICE
2498/1155	9/03/2021	WD	Q	I	01	430,000
GRANTOR: HARRISON TIMOTHY U &						
GRANTEE: MCNEAL ROY D JR & A						
0563/1188	2/23/1989	WD	Q	V		23,000
GRANTOR: CRAIG WM & LINDA						
GRANTEE: HARRISON TIMOTHY &						

BUILDING NOTES

BUILDING DIMENSIONS

UEP=[YR=2001] W21 S10 BAS=[YR=1995] W11 S4 W48 S33 E26 N2 E16 FOP=[YR=1995] E4 N3 W4 S3$ N3 E4 S3 E12 BAS=[YR=2001] E22 N3FCP=[YR=2007] E18 N28 W18 S28$ N16 FST=[YR=1995] N12 W5S12 E5$ W22 S19$ N19 E17 N12 W16 N4$ S4 E21 N14$.

EXTRA FEATURES

LN	OB/XF CODE	DESCRIPTION	BLD	CAP	L	W	UNITS	UT	Adj R	ADJ UNIT PRICE	ORIG COND	YEAR ON	YEAR ACTUAL	Q	% COND	OB/XF MKT VALUE	NOTES
2	0680	POLE SHED	0	100	20	16	320.00	SF	10.00	10.00	100	1990	1990	3	20	640	
3	0680	POLE SHED	0	100	24	24	576.00	SF	10.00	10.00	100	1995	1995	3	24	1,382	
7	0500	FP-PRE FAB	0	100	0	0	1.00	UT	3,500.00	3,500.00	100	1994	1994	3	77	2,695	
11	0810	CONCRETE A	0	100	0	0	198.00	SF	6.50	6.50	100	1996	1996	3	73	940	
12	0510	GARAGE WD-	0	100	20	20	400.00	SF	29.75	29.75	100	2002	2002	3	32	3,808	
13	0351	CARPORT MT	0	100	20	8	160.00	SF	8.50	8.50	100	2002	2002	3	21	286	
14	0351	CARPORT MT	0	100	20	13	260.00	SF	6.00	6.00	100	2003	2003	3	22	343	
15	0510	GARAGE WD-	0	100	36	24	864.00	SF	26.25	26.25	100	2003	2003	3	36	8,165	
16	0681	POLE SHED	0	100	50	40	2,000.00	SF	11.25	11.25	100	2005	2005	3	44	9,900	

LAND DESCRIPTION

TOTAL OB/XF 28,159

LN	USE CODE	CLS	LAND USE DESCRIPTION	CAP	RD	LOC ZONE	FRONT	DEPTH	TOT LND UTS	UNIT TYPE	DT	DPTH FACT	% COND	TOT ADJ	UNIT PRICE	ADJ UNIT PRICE	LAND VALUE	OTHER ADJUSTMENTS AND NOTES	YEAR	DENSITY	DECL	FRZ	YR	CONSRV
1	000115	C	SFR ACRES	100	0005	OR	0.00	0.00	5.00	AC		1.00	1.00	1.00	19,000.00	19,000.00	95,000							

REVIEW DATE 03/30/2020 BY TWA Total Acres: 5.00 Total Land Value: 95,000 Market: 0 Agricultural: 0 Common: 95,000 PRINTED 08/02/2023 BY SYS