LOTS 75 83 84 & S-2 OF 76
IN OR 2059/109
ESMT OR 749/987

TESTA ANTHONY MICHAEL
76461 DOVE RD
YULEE, FL 32097

2023

05-2N-27-4292-0075-0000

NASSAU COUNTY PROPERTY

BUILDING CHARACTERISTICS

ELEMENT	CD	CONSTRUCTION
Exterior Wall	05	AVERAGE 100
Roof Structur	03	GABLE/HIP 100
Roof Cover	12	MODULAR MT 100
Interior Wall	04	PLYWOOD 80
Interior Wall	05	DRYWALL 20
Interior Floo	14	CARPET 60
Interior Floo	07	CORK/VTILE 40
Air Condition	03	CENTRAL 100
Heating Type	04	AIR DUCTED 100
Bedrooms		3 100
Bathrooms		2 100
Frame	02	WOOD FRAME 100
Stories	1.	1. 100
Units		0 100
BUD8 Adjustme	04	DIST 01 100
Occupancy	00	NONE 100
Quality	03	Quality Level 03

DOR CODE 0100 SINGLE FAMILY
MAP NUM | MKT AREA 04
NEIGHBORHOOD/LOC 4053.00

AREA TYPE	TOTAL GROSS AREA	PCT OF BASE	TOT ADJ AREA	SUBAREA MARKET VALUE
BAS	2,413	100	2,413	178,840
UEP	128	60	77	5,707
UOP	184	20	37	2,742
TOTALS	2,725		2,527	187,290

MARKET ADJUSTMENTS

TYPE	MDL	EFF. AREA	TOT ADJ PTS	EFF. BASE RATE	REPL. COST NEW	AYB	EYB	ECON	FNCT		NORM	% COND
0100	01	2,527	99.8400	90.11	227,708	1980	1980	0	0	0	17.75	82.25

1 SINGLE FAM – 0% - 0 Heated Area: 2413 HX Base Yr

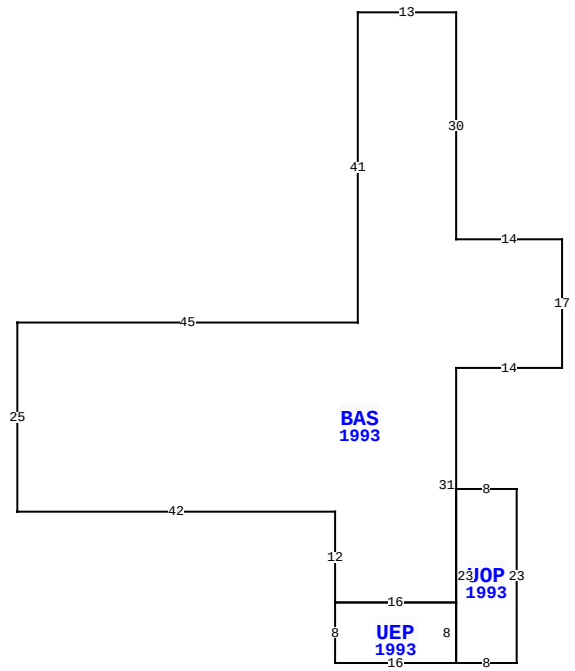

76087 CATHY LN, YULEE

BLD DATE		LGL DATE	
XF DATE		LAND DATE	
INC DATE		AG DATE	

VALUATION SUMMARY

VALUATION BY	STANDARD
Tax Group: 4	Tax Dist:
BUILDING MARKET VALUE	215,628
TOTAL MARKET OB/XF VALUE	9,227
TOTAL LAND VALUE - MARKET	239,400
TOTAL MARKET VALUE	464,255
SOH/AGL Deduction	141,138
ASSESSED VALUE	323,117
TOTAL EXEMPTION VALUE	0
BASE TAXABLE VALUE	323,117
TOTAL JUST VALUE	464,255
NCON VALUE	0
INCOME VALUE	
PREVIOUS YEAR MKT VALUE	343,647

PERMIT NUM	DESCRIPTION	AMT	ISSUED
3001	REPAIR/RRF	1,500	09/24/1985

SALES DATA

OFF RECORD Number	DATE	TYPE INST	Q / U	V / I	RSN CD	SALE PRICE
2082/1523	11/01/2016	FJ	U	I	11	0
GRANTOR: VAN ZEELAND CATHERINE						
GRANTEE: TESTA ANTHONY MICHA						
2075/0552	9/23/2016	QC	U	I	11	100
GRANTOR: WHITNEY BANK						
GRANTEE: TESTA ANTHONY MICHA						

BUILDING NOTES

BUILDING DIMENSIONS

BAS=[YR=1993] W14 N30 W13 S41 W45 S25 E42 S12 UEP=[YR=1993] S8 E16 UOP=[YR=1993] E8 N23 W8 S23$N8 W16$ E16 N31 E14 N17$.

EXTRA FEATURES

LN	OB/XF CODE	DESCRIPTION	BLD	CAP	L	W	UNITS	UT	Adj R	ADJ UNIT PRICE	ORIG COND	YEAR ON	YEAR ACTUAL	Q	% COND	OB/XF MKT VALUE	NOTES
2	0810	CONCRETE A	0	0	12	20	240.00	SF	4.36	4.36	100	1980	1980	3	35	366	
3	0940	SHEDS/PORT	0	0	12	16	192.00	SF	20.10	20.10	100	1995	1995	3	20	772	
6	0751	UOP	0	0	12	20	240.00	SF	10.00	10.00	100	1998	1998	3	27	648	
7	0510	GARAGE WD-	0	0	24	20	480.00	SF	35.00	35.00	100	1998	1998	3	27	4,536	
8	0500	FP-PRE FAB	0	0	0	0	1.00	UT	3,500.00	3,500.00	100	1998	1998	3	83	2,905	

LAND DESCRIPTION

TOTAL OB/XF 9,227

LN	USE CODE	CLS	LAND USE DESCRIPTION	CAP	RD	LOC ZONE	FRONT	DEPTH	TOT LND UTS	UNIT TYPE	DT	DPTH FACT	% COND	TOT ADJ	UNIT PRICE	ADJ UNIT PRICE	LAND VALUE	OTHER ADJUSTMENTS AND NOTES	YEAR	DENSITY	DECL	FRZ	YR	CONSRV
1	000115	C	SFR ACRES	0	0005	OR	0.00	0.00	2.97	AC		1.00	1.00	1.00	80,000.00	80,000.00	237,600							
2	009630	C	SWAMP	0		OR	0.00	0.00	3.60	AC		1.00	1.00	1.00	500.00	500.00	1,800							

REVIEW DATE 03/23/2020 BY NWP Total Acres: 6.57 Total Land Value: 239,400 Market: 0 Agricultural: 0 Common: 239,400 PRINTED 08/02/2023 BY SYS

LOTS 75 83 84 & S-2 OF 76
IN OR 2059/109
ESMT OR 749/987

TESTA ANTHONY MICHAEL
76461 DOVE RD
YULEE, FL 32097

2023

05-2N-27-4292-0075-0000

BUILDING CHARACTERISTICS

ELEMENT	CD	CONSTRUCTION
Exterior Wall	25	MOD METAL 100
Roof Structur	01	FLAT 100
Roof Cover	01	MINIMUM 100
Interior Wall	04	PLYWOOD 100
Interior Floo	14	CARPET 90
Interior Floo	08	SHT VINYL 10
Air Condition	03	CENTRAL 100
Heating Type	04	AIR DUCTED 100
Bedrooms		2 100
Bathrooms		1 100
Frame	02	WOOD FRAME 100
Stories	1.	1. 100
Units		0 100
Quality	02	Quality Level 02
DOR CODE	0100	SINGLE FAMILY
MAP NUM		MKT AREA 04
NEIGHBORHOOD/LOC	4053.00	

AREA TYPE	TOTAL GROSS AREA	PCT OF BASE	TOT ADJ AREA	SUBAREA MARKET VALUE
BAS	672	100	672	8,586
BAS	300	100	300	3,833
UOP	220	25	55	703
UST	36	55	20	256
UST	96	55	53	677
TOTALS	1,324		1,100	14,055

MARKET ADJUSTMENTS

TYPE	MDL	EFF. AREA	TOT ADJ PTS	EFF. BASE RATE	REPL. COST NEW	AYB	EYB	ECON	FNCT		NORM	% COND
0820	02	1,100	65.5200	42.59	46,849	1977	1977	0	0	0	70.00	30.00

2 M/H 93- – 0% - 0 Heated Area: 972 HX Base Yr

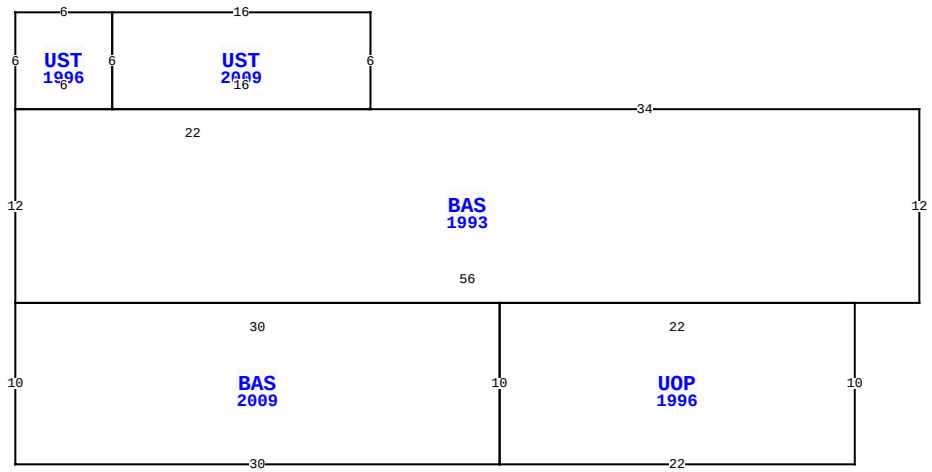

76087 CATHY LN, YULEE

BLD DATE		LGL DATE	
XF DATE		LAND DATE	
INC DATE		AG DATE	

NASSAU COUNTY PROPERTY

PAGE 2 of 3 4

VALUATION SUMMARY

VALUATION BY	STANDARD
Tax Group: 4	Tax Dist:
BUILDING MARKET VALUE	215,628
TOTAL MARKET OB/XF VALUE	9,227
TOTAL LAND VALUE - MARKET	239,400
TOTAL MARKET VALUE	464,255
SOH/AGL Deduction	141,138
ASSESSED VALUE	323,117
TOTAL EXEMPTION VALUE	0
BASE TAXABLE VALUE	323,117
TOTAL JUST VALUE	464,255
NCON VALUE	0
INCOME VALUE	
PREVIOUS YEAR MKT VALUE	343,647

PERMIT NUM	DESCRIPTION	AMT	ISSUED

SALES DATA

OFF RECORD Number	DATE	TYPE INST	Q U /	V I /	RSN CD	SALE PRICE
2082/1523	11/01/2016	FJ	U	I	11	0
GRANTOR: VAN ZEELAND CATHERINE						
GRANTEE: TESTA ANTHONY MICHA						
2075/0552	9/23/2016	QC	U	I	11	100
GRANTOR: WHITNEY BANK						
GRANTEE: TESTA ANTHONY MICHA						

BUILDING NOTES

BUILDING DIMENSIONS

BAS=[YR=1993] W34 UST=[YR=2009] N6 W16 UST=[YR=1996] W6 S6 E6 N6 $ S6 E16 $ W22 S12 BAS=[YR=2009] S10 E30 UOP=[YR=1996] E22 N10 W22 S10 $ N10 W30 $ E56 N12 $.

EXTRA FEATURES

LN	OB/XF CODE	DESCRIPTION	BLD	CAP	L	W	UNITS	UT	Adj R	ADJ UNIT PRICE	ORIG COND	YEAR ON	YEAR ACTUAL	Q	% COND	OB/XF MKT VALUE	NOTES

LAND DESCRIPTION

TOTAL OB/XF 0

LN	USE CODE	CLS	LAND USE DESCRIPTION	CAP	RD	LOC ZONE	FRONT	DEPTH	TOT LND UTS	UNIT TYPE	DT	DPTH FACT	% COND	TOT ADJ	UNIT PRICE	ADJ UNIT PRICE	LAND VALUE	OTHER ADJUSTMENTS AND NOTES	YEAR	DENSITY	DECL	FRZ	YR	CONSRV

REVIEW DATE 03/23/2020 BY NWP Total Acres: 6.57 Total Land Value: 239,400 Market: 0 Agricultural: 0 Common: 239,400 PRINTED 08/02/2023 BY SYS

LOTS 75 83 84 & S-2 OF 76
IN OR 2059/109
ESMT OR 749/987

TESTA ANTHONY MICHAEL
76461 DOVE RD
YULEE, FL 32097

2023

05-2N-27-4292-0075-0000

BUILDING CHARACTERISTICS

ELEMENT	CD	CONSTRUCTION
Exterior Wall	25	MOD METAL 70
Exterior Wall	05	AVERAGE 30
Roof Structur	01	FLAT 100
Roof Cover	01	MINIMUM 100
Interior Wall	05	DRYWALL 100
Interior Floo	02	MIN PLYWD 100
Air Condition	01	NONE 100
Heating Type	04	AIR DUCTED 100
Bedrooms		2 100
Bathrooms		1 100
Frame	02	WOOD FRAME 100
Stories	1.	1. 100
Units		0 100
Quality	03	Quality Level 03
DOR CODE	0100	SINGLE FAMILY
MAP NUM		MKT AREA 04
NEIGHBORHOOD/LOC	4053.00	

AREA TYPE	TOTAL GROSS AREA	PCT OF BASE	TOT ADJ AREA	SUBAREA MARKET VALUE
BAS	200	100	200	3,280
BAS	616	100	616	10,101
UOP	221	25	55	902
TOTALS	1,037		871	14,283

MARKET ADJUSTMENTS

TYPE	MDL	EFF. AREA	TOT ADJ PTS	EFF. BASE RATE	REPL. COST NEW	AYB	EYB	ECON	FNCT		NORM	% COND
0820	02	871	84.1000	54.66	47,609	1986	1986	0	0	0	70.00	30.00

3 M/H 93- – 0% - 0 Heated Area: 816 HX Base Yr

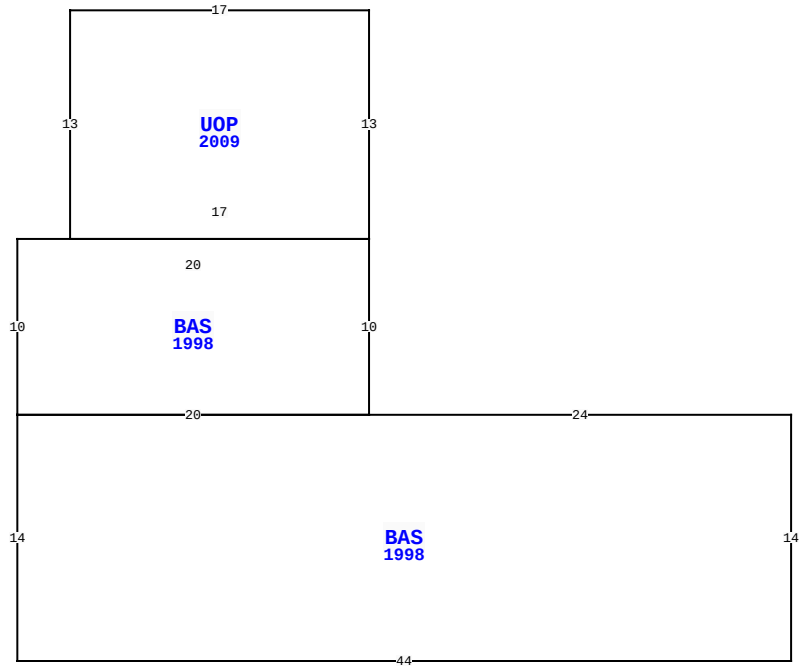

76087 CATHY LN, YULEE

BLD DATE		LGL DATE	
XF DATE		LAND DATE	
INC DATE		AG DATE	

NASSAU COUNTY PROPERTY

PAGE 3 of 3 4

VALUATION SUMMARY

VALUATION BY	STANDARD
Tax Group: 4	Tax Dist:
BUILDING MARKET VALUE	215,628
TOTAL MARKET OB/XF VALUE	9,227
TOTAL LAND VALUE - MARKET	239,400
TOTAL MARKET VALUE	464,255
SOH/AGL Deduction	141,138
ASSESSED VALUE	323,117
TOTAL EXEMPTION VALUE	0
BASE TAXABLE VALUE	323,117
TOTAL JUST VALUE	464,255
NCON VALUE	0
INCOME VALUE	
PREVIOUS YEAR MKT VALUE	343,647

PERMIT NUM	DESCRIPTION	AMT	ISSUED

SALES DATA

OFF RECORD Number	DATE	TYPE INST	Q / U	V / I	RSN CD	SALE PRICE
2082/1523	11/01/2016	FJ	U	I	11	0
GRANTOR: VAN ZEELAND CATHERINE						
GRANTEE: TESTA ANTHONY MICHA						
2075/0552	9/23/2016	QC	U	I	11	100
GRANTOR: WHITNEY BANK						
GRANTEE: TESTA ANTHONY MICHA						

BUILDING NOTES

BUILDING DIMENSIONS

BAS=[YR=1998] W24 BAS=[YR=1998] N10 UOP=[YR=2009] N13 W17 S13 E17 $ W20 S10 E20$ W20 S14 E44 N14$.

EXTRA FEATURES

L N	OB/XF CODE	DESCRIPTION	BLD	CAP	L	W	UNITS	UT	Adj R	ADJ UNIT PRICE	ORIG COND	YEAR ON	YEAR ACTUAL	Q	% COND	OB/XF MKT VALUE	NOTES

LAND DESCRIPTION

TOTAL OB/XF 0

L N	USE CODE	CLS	LAND USE DESCRIPTION	CAP	R D	LOC ZONE	FRONT	DEPTH	TOT LND UTS	UNIT TYPE	D T	DPTH FACT	% COND	TOT ADJ	UNIT PRICE	ADJ UNIT PRICE	LAND VALUE	OTHER ADJUSTMENTS AND NOTES	YEAR	DENSITY	DECL	FRZ	YR	CONSRV

REVIEW DATE 03/23/2020 BY NWP Total Acres: 6.57 Total Land Value: 239,400 Market: 0 Agricultural: 0 Common: 239,400 PRINTED 08/02/2023 BY SYS