IN OR 2483/1905
(EX 6-1) (EX 6-2)
EX R/W OR 980/1731

BAILEY TRACI K
12310 US HWY 301
BRYCEVILLE, FL 32009

2023

05-1S-24-0000-0006-0000

BUILDING CHARACTERISTICS

ELEMENT	CD	CONSTRUCTION
Exterior Wall	16	WD FR STUC 100
Roof Structur	08	IRREGULAR 100
Roof Cover	03	COMP SHNGL 100
Interior Wall	05	DRYWALL 100
Interior Floo	14	CARPET 80
Interior Floo	08	SHT VINYL 20
Air Condition	03	CENTRAL 100
Heating Type	04	AIR DUCTED 100
Bedrooms		4 100
Bathrooms		4 100
Frame	02	WOOD FRAME 100
Stories	1.	1. 100
Units		0 100
Occupancy	00	NONE 100
Quality	01	Quality Level 01
DOR CODE	0100	SINGLE FAMILY
MAP NUM		MKT AREA 08
NEIGHBORHOOD/LOC	8001.00	

AREA TYPE	TOTAL GROSS AREA	PCT OF BASE	TOT ADJ AREA	SUBAREA MARKET VALUE
BAS	2,136	100	2,136	225,505
FGR	513	55	282	29,772
FOP	72	30	22	2,322
FOP	180	30	54	5,701
FUS	392	100	392	41,385
TOTALS	3,293		2,886	304,686

MARKET ADJUSTMENTS

TYPE	MDL	EFF. AREA	TOT ADJ PTS	EFF. BASE RATE	REPL. COST NEW	AYB	EYB	ECON	FNCT		NORM	% COND
0900	01	2,886	95.5980	113.52	327,619	2008	2008	0	0	0	7.00	93.00

1 SNGL FAM – 100% - 2009 Heated Area: 2528 HX Base Yr 2009

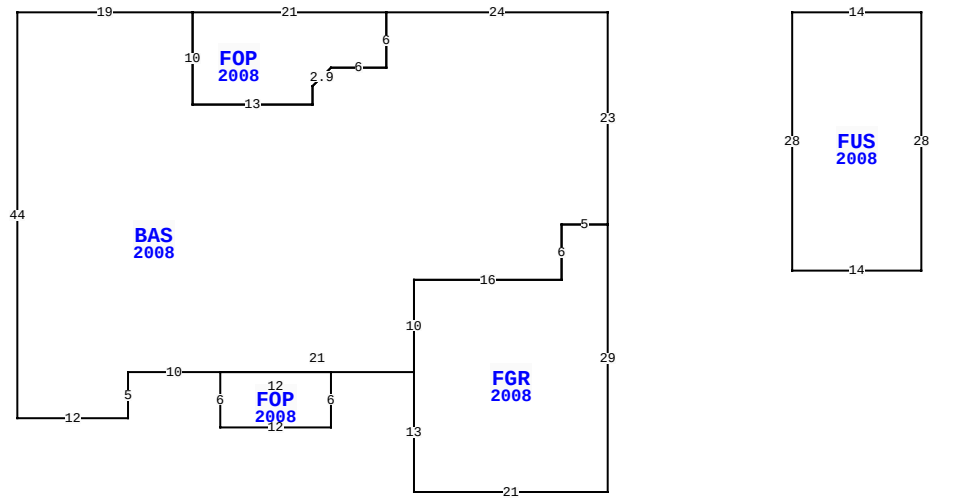

12310 US HWY 301, BRYCEVILLE

BLD DATE	12/12/2008 JH	LGL DATE	
XF DATE		LAND DATE	06/13/2023 MLU
INC DATE		AG DATE	

NASSAU COUNTY PROPERTY

PAGE 1 of 1 6

VALUATION SUMMARY

VALUATION BY		STANDARD
Tax Group: 6	Tax Dist:	
BUILDING MARKET VALUE		304,686
TOTAL MARKET OB/XF VALUE		25,115
TOTAL LAND VALUE - MARKET		30,000
TOTAL MARKET VALUE		359,801
SOH/AGL Deduction		108,447
ASSESSED VALUE		251,354
TOTAL EXEMPTION VALUE	HX HB	50,000
BASE TAXABLE VALUE		201,354
TOTAL JUST VALUE		359,801
NCON VALUE		0
INCOME VALUE		
PREVIOUS YEAR MKT VALUE		297,375

PERMIT NUM	DESCRIPTION	AMT	ISSUED
M14209	H/AC	0	10/01/2008
R11604	REPAIR/RRF	9,894	10/01/2008
C21935	CO ISSUED	0	09/01/2008
E21286	ELEC OTHER	2,000	09/01/2008
B21935	NEW CONSTR	223,410	09/01/2008
P13492	OTHER	0	09/01/2008

SALES DATA

OFF RECORD Number	DATE	TYPE INST	Q / U	V / I	RSN CD	SALE PRICE
2483/1905	7/24/2021	WD	U	I	11	100
GRANTOR: BAILEY CHAD P						
GRANTEE: BAILEY TRACI K						
1587/0894	9/30/2008	WD	U	V	07	100
GRANTOR: CONNER LEWIS H						
GRANTEE: BAILEY CHAD P & TRA						

BUILDING NOTES

BUILDING DIMENSIONS

BAS=[YR=2008] W24 FOP=[YR=2008] W21 S10 E13 N2 U2 R2 E6 N6$ S6 W6 D2 L2 S2 W13 N10 W19 S44 E12 N5 E10 FOP=[YR=2008] S6 E12 N6 W12$ E21 FGR=[YR=2008] S13 E21 N29 W5 S6 W16 S10$ N10 E16 N6 E5 N23$ PTR=E20 FUS=[YR=2008] E14 S28 W14 N28$ W20$.

EXTRA FEATURES

LN	OB/XF CODE	DESCRIPTION	BLD	CAP	L	W	UNITS	UT	Adj R	ADJ UNIT PRICE	ORIG COND	YEAR ON	YEAR ACTUAL	Q	% COND	OB/XF MKT VALUE	NOTES
1	0812	CONCRETE C	0	100	0	0	1,011.00	SF	4.00	4.00	100	2008	2008	3	90	3,640	
2	0812	CONCRETE C	0	100	88	12	1,056.00	SF	4.00	4.00	100	2010	2010	3	92	3,886	
3	0510	GARAGE WD-	0	100	22	20	440.00	SF	24.50	24.50	100	2013	2013	3	75	8,085	
4	0812	CONCRETE C	0	100	60	40	2,400.00	SF	4.00	4.00	100	2019	2019	3	99	9,504	

LAND DESCRIPTION

TOTAL OB/XF 25,115

LN	USE CODE	CLS	LAND USE DESCRIPTION	CAP	RD	LOC ZONE	FRONT	DEPTH	TOT LND UTS	UNIT TYPE	DT	DPTH FACT	% COND	TOT ADJ	UNIT PRICE	ADJ UNIT PRICE	LAND VALUE	OTHER ADJUSTMENTS AND NOTES	YEAR	DENSITY	DECL	FRZ	YR	CONSRV
1	000115	C	SFR ACRES	100	0004	OR	0.00	0.00	1.00	AC		1.00	1.00	1.00	30,000.00	30,000.00	30,000							

REVIEW DATE 04/14/2020 BY TWA Total Acres: 1.00 Total Land Value: 30,000 Market: 0 Agricultural: 0 Common: 30,000 PRINTED 08/02/2023 BY SYS