PT OF SE1/4 OF SEC 4-3N-24E
IN OR 2362/96
LYING EAST OF OR 2198/1592

BULGER JASON R & CHASIDY L
37160 OLD PINE RIDGE
HILLIARD, FL 32046

2023

04-3N-24-0000-0004-0080

BUILDING CHARACTERISTICS

ELEMENT	CD	CONSTRUCTION
Exterior Wall	10	ABOVE AVG 100
Roof Structur	08	IRREGULAR 100
Roof Cover	12	MODULAR MT 100
Interior Wall	05	DRYWALL 100
Interior Floo	13	LVT/LAMNT 70
Interior Floo	11	CLAY TILE 30
Air Condition	03	CENTRAL 100
Heating Type	04	AIR DUCTED 100
Bedrooms		3 100
Bathrooms		3 100
Frame	02	WOOD FRAME 100
Stories	0	0 100
Units		0 100
Occupancy	00	NONE 100
Quality	01	Quality Level 01
DOR CODE	0100	SINGLE FAMILY
MAP NUM		MKT AREA 06
NEIGHBORHOOD/LOC	6001.00	

AREA TYPE	TOTAL GROSS AREA	PCT OF BASE	TOT ADJ AREA	SUBAREA MARKET VALUE
BAS	2,746	100	2,746	346,188
FGR	1,075	55	591	74,507
FOP	394	30	118	14,876
FOP	535	30	160	20,171
FST	150	55	82	10,338
FUS	852	100	852	107,412
STR	52	10	5	630
TOTALS	5,804		4,554	574,123

MARKET ADJUSTMENTS

TYPE	MDL	EFF. AREA	TOT ADJ PTS	EFF. BASE RATE	REPL. COST NEW	AYB	EYB	ECON	FNCT		NORM	% COND
0500	01	4,554	88.4682	126.07	574,123	2021	2021	0	0	0	0.00	100.00

1 SFR CUST – 100% - 2022 Heated Area: 3598 HX Base Yr 2022

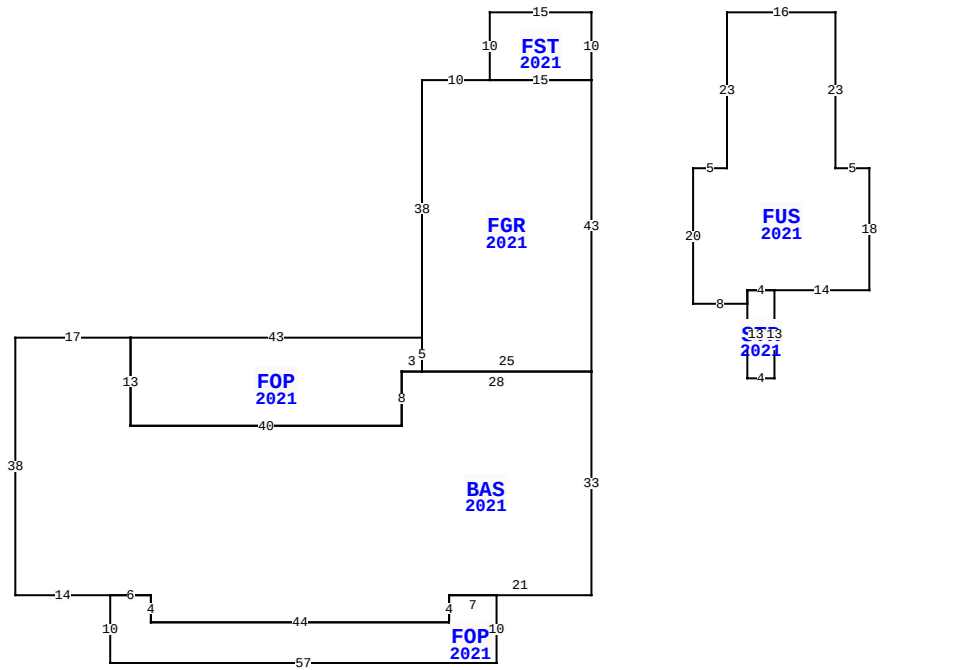

37160 OLD PINE RIDGE RD, HILLIARD

BLD DATE		LGL DATE	
XF DATE		LAND DATE	01/15/2020 MF
INC DATE		AG DATE	

NASSAU COUNTY PROPERTY

PAGE 1 of 1 3

VALUATION SUMMARY

VALUATION BY		STANDARD
Tax Group: 3	Tax Dist:	
BUILDING MARKET VALUE		574,123
TOTAL MARKET OB/XF VALUE		96,300
TOTAL LAND VALUE - MARKET		62,790
TOTAL MARKET VALUE		733,213
SOH/AGL Deduction		83,710
ASSESSED VALUE		649,503
TOTAL EXEMPTION VALUE	HX HB	50,000
BASE TAXABLE VALUE		599,503
TOTAL JUST VALUE		733,213
NCON VALUE		0
INCOME VALUE		
PREVIOUS YEAR MKT VALUE		648,307

PERMIT NUM	DESCRIPTION	AMT	ISSUED
20200274	SWIM POOL	0	12/10/2020
20200137	NEW CONSTR	0	06/23/2020

SALES DATA

OFF RECORD Number	DATE	TYPE INST	Q U	V I	RSN CD	SALE PRICE
2362/0096	3/27/2020	WD	U	V	11	100
GRANTOR: PICKETT HARRY & JULIE						
GRANTEE: BULGER JASON R & CH						
2362/0091	3/27/2020	QC	U	V	11	100
GRANTOR: PICKETT JULIE G REVOC						
GRANTEE: PICKETT HARRY & JUL						

BUILDING NOTES

BUILDING DIMENSIONS

FST=[YR=2021] W15 S10 FGR=[YR=2021] W10 S38 FOP=[YR=2021] W43 BAS=[YR=2021] W17 S38 E14 FOP=[YR=2021] S10 E57 N10 W7 S4 W44 N4 W6$ E6 S4 E44 N4 E21 N33 W28 S8 W40 N13$ S13 E40 N8 E3 N5$ S5 E25 N43 W15$ E15 N10 $ PTR=E20 FUS=[YR=2021] E16 S23 E5 S18 W14 STR=[YR=2021] S13 W4 N13 E4$ W4 S2 W8 N20 E5 N23$ W20$.

EXTRA FEATURES

LN	OB/XF CODE	DESCRIPTION	BLD	CAP	L	W	UNITS	UT	Adj R	ADJ UNIT PRICE	ORIG COND	YEAR ON	YEAR ACTUAL	Q	% COND	OB/XF MKT VALUE	NOTES
1	0812	CONCRETE C	0	100	0	0	1,311.00	SF	4.00	4.00	100	2021	2021	3	100	5,244	
2	0861	POOL GUNIT	0	100	0	0	880.00	SF	85.00	85.00	100	2021	2021	3	98	73,304	
3	0845	KOOL DECK	0	100	0	0	1,880.00	SF	7.25	7.25	100	2021	2021	3	100	13,630	
4	0476	VF 6 SBPL	0	100	0	0	102.00	LF	32.00	32.00	100	2021	2021	3	99	3,231	
5	0470	VNYL GATE	0	100	0	0	3.00	UT	300.00	300.00	100	2021	2021	3	99	891	

LAND DESCRIPTION

TOTAL OB/XF 96,300

LN	USE CODE	CLS	LAND USE DESCRIPTION	CAP	RD	LOC ZONE	FRONT	DEPTH	TOT LND UTS	UNIT TYPE	DT	DPTH FACT	% COND	TOT ADJ	UNIT PRICE	ADJ UNIT PRICE	LAND VALUE	OTHER ADJUSTMENTS AND NOTES	YEAR	DENSITY	DECL	FRZ	YR	CONSRV
1	000115	C	SFR ACRES	100			0.00	0.00	2.73	AC		1.00	1.00	1.00	23,000.00	23,000.00	62,790							

REVIEW DATE 07/20/2021 BY TW Total Acres: 2.73 Total Land Value: 62,790 Market: 0 Agricultural: 0 Common: 62,790 PRINTED 08/02/2023 BY SYS