IN OR 1248/1836 & OR 1868/760

VONNOH RAYMOND JR
86476 CARDINAL ROAD
YULEE, FL 32097

2023

04-2N-27-0000-0003-0590

BUILDING CHARACTERISTICS

ELEMENT	CD	CONSTRUCTION
Exterior Wall	10	ABOVE AVG 80
Exterior Wall	16	WD FR STUC 20
Roof Structur	03	GABLE/HIP 100
Roof Cover	03	COMP SHNGL 100
Interior Wall	05	DRYWALL 100
Interior Floo	14	CARPET 70
Interior Floo	12	HARDWOOD 30
Air Condition	03	CENTRAL 100
Heating Type	04	AIR DUCTED 100
Bedrooms		3 100
Bathrooms		3.5 100
Frame	02	WOOD FRAME 100
Stories	2.	2. 100
Units		0 100
Occupancy	00	NONE 100
Quality	03	Quality Level 03
DOR CODE	0100	SINGLE FAMILY
MAP NUM		MKT AREA 04
NEIGHBORHOOD/LOC	4053.00	

AREA TYPE	TOTAL GROSS AREA	PCT OF BASE	TOT ADJ AREA	SUBAREA MARKET VALUE
BAS	2,263	100	2,263	191,491
DCK	180	10	18	1,523
FGR	563	55	310	26,232
FOP	272	30	82	6,939
FOP	272	30	82	6,939
FUS	312	100	312	26,401
UAT	132	10	13	1,100
TOTALS	3,994		3,080	260,623

MARKET ADJUSTMENTS

TYPE	MDL	EFF. AREA	TOT ADJ PTS	EFF. BASE RATE	REPL. COST NEW	AYB	EYB	ECON	FNCT		NORM	% COND
0100	01	3,080	102.5800	92.58	285,146	2004	2004	0	0	0	8.60	91.40

1 SINGLE FAM – 100% - 2005 Heated Area: 2575 HX Base Yr 2005

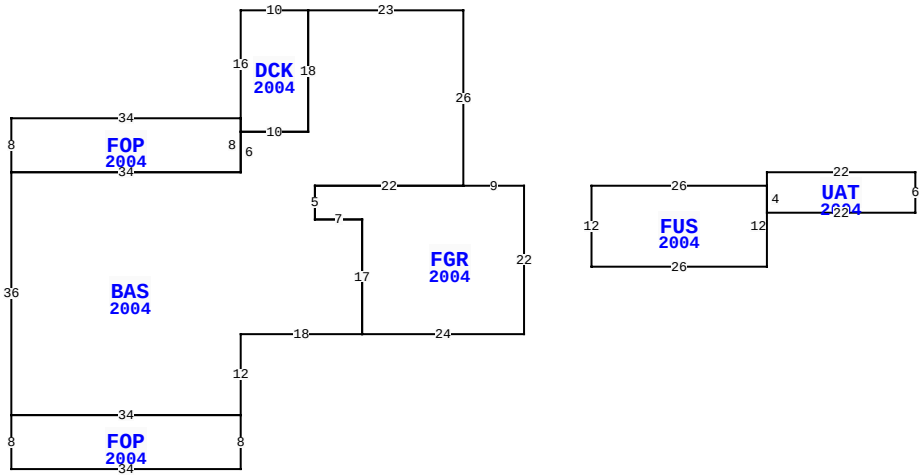

86476 CARDINAL RD, YULEE

BLD DATE		LGL DATE	
XF DATE		LAND DATE	
INC DATE		AG DATE	

NASSAU COUNTY PROPERTY

PAGE 1 of 1 4

VALUATION SUMMARY

VALUATION BY		STANDARD
Tax Group: 4	Tax Dist:	
BUILDING MARKET VALUE		260,623
TOTAL MARKET OB/XF VALUE		6,366
TOTAL LAND VALUE - MARKET		144,800
TOTAL MARKET VALUE		411,789
SOH/AGL Deduction		206,958
ASSESSED VALUE		204,831
TOTAL EXEMPTION VALUE	HX HB	50,000
BASE TAXABLE VALUE		154,831
TOTAL JUST VALUE		411,789
NCON VALUE		0
INCOME VALUE		
PREVIOUS YEAR MKT VALUE		319,697

PERMIT NUM	DESCRIPTION	AMT	ISSUED
22001204	REPAIR/RRF	10,000	01/20/2022
B011620	NEW CONSTR	0	08/01/2003
WE030138	OTHER	0	08/01/2003

SALES DATA

OFF RECORD Number	DATE	TYPE INST	Q U /	V I /	RSN CD	SALE PRICE
1868/0760	7/12/2013	QC	U	I	11	100
GRANTOR: PEACOCK DEBORAH KAY						
GRANTEE: VONNOH RAYMOND JOSE						
1863/1776	6/20/2013	QC	U	I	11	100
GRANTOR: PEACOCK DEBORAH KAY						
GRANTEE: VONNOH RAYMOND JOSE						

BUILDING NOTES

BUILDING DIMENSIONS

FGR=[YR=2004] W9 BAS=[YR=2004] N26 W23 DCK=[YR=2004] W10 S16 FOP=[YR=2004] W34 S8 E34 N8 $ S2 E10 N18 $ S18 W10 S6 W34 S36 FOP=[YR=2004] S8 E34 N8 W34 $ E34 N12 E18 N17 W7 N5 E22 $ W22 S5 E7 S17 E24 N22 $ PTR= E10 FUS=[YR=2004] E26 UAT=[YR=2004] N2 E22 S6 W22 N4 $ S12 W26 N12 $ W10 $.

EXTRA FEATURES

LN	OB/XF CODE	DESCRIPTION	BLD	CAP	L	W	UNITS	UT	Adj R	ADJ UNIT PRICE	ORIG COND	YEAR ON	YEAR ACTUAL	Q	% COND	OB/XF MKT VALUE	NOTES
3	0500	FP-PRE FAB	0	100	0	0	1.00	UT	3,500.00	3,500.00	100	2004	2004	3	89	3,115	
4	0811	CONCRETE B	0	100	0	0	727.00	SF	5.20	5.20	100	2004	2004	3	86	3,251	

LAND DESCRIPTION

TOTAL OB/XF 6,366

LN	USE CODE	CLS	LAND USE DESCRIPTION	CAP	RD	LOC ZONE	FRONT	DEPTH	TOT LND UTS	UNIT TYPE	DT	DPTH FACT	% COND	TOT ADJ	UNIT PRICE	ADJ UNIT PRICE	LAND VALUE	OTHER ADJUSTMENTS AND NOTES	YEAR	DENSITY	DECL	FRZ	YR	CONSRV
1	000115	C	SFR ACRES	100			0.00	0.00	1.81	AC		1.00	1.00	1.00	80,000.00	80,000.00	144,800							

REVIEW DATE 01/25/2018 BY SBX Total Acres: 1.81 Total Land Value: 144,800 Market: 0 Agricultural: 0 Common: 144,800 PRINTED 08/02/2023 BY SYS