PT OF SEC 04-2N-27E
IN OR 2514/664

RICHEY SANDRA K
86173 ROBIN ROAD
YULEE, FL 32097

2023

04-2N-27-0000-0003-0440

BUILDING CHARACTERISTICS

ELEMENT	CD	CONSTRUCTION
Exterior Wall	05	AVERAGE 100
Roof Structur	03	GABLE/HIP 100
Roof Cover	03	COMP SHNGL 100
Interior Wall	05	DRYWALL 100
Interior Floo	14	CARPET 100
Air Condition	03	CENTRAL 100
Heating Type	04	AIR DUCTED 100
Bedrooms		4 100
Bathrooms		3 100
Frame	02	WOOD FRAME 100
Stories	2.	2. 100
Units		0 100
Occupancy	00	NONE 100
Quality	04	Quality Level 04

DOR CODE 0100 SINGLE FAMILY
MAP NUM | MKT AREA 04
NEIGHBORHOOD/LOC 4053.00

AREA TYPE	TOTAL GROSS AREA	PCT OF BASE	TOT ADJ AREA	SUBAREA MARKET VALUE
BAS	2,010	100	2,010	165,136
FGR	478	55	263	21,607
FOP	294	30	88	7,230
FUS	945	100	945	77,638
UOP	540	20	108	8,873
TOTALS	4,267		3,414	280,485

MARKET ADJUSTMENTS

TYPE	MDL	EFF. AREA	TOT ADJ PTS	EFF. BASE RATE	REPL. COST NEW	AYB	EYB	ECON	FNCT		NORM	% COND
0100	01	3,414	101.4300	91.54	312,518	1996	2001	0	0	0	10.25	89.75

1 SINGLE FAM – 100% - 1997 Heated Area: 2955 HX Base Yr 1997

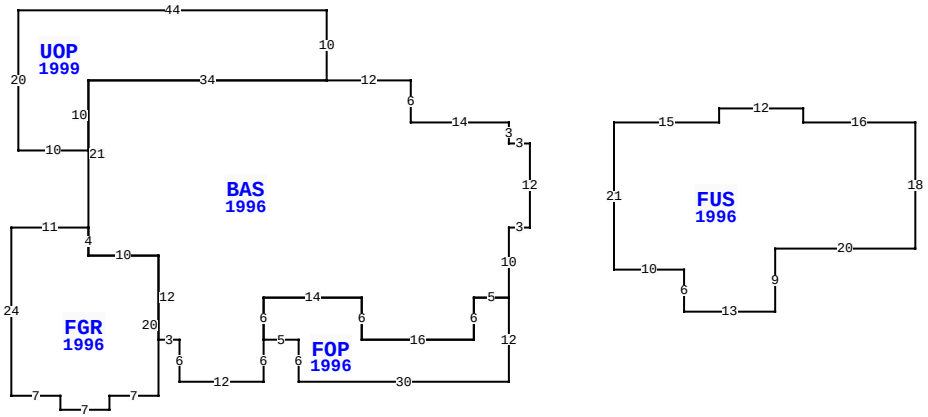

86173 ROBIN RD, YULEE

BLD DATE		LGL DATE	
XF DATE		LAND DATE	
INC DATE		AG DATE	

NASSAU COUNTY PROPERTY

PAGE 1 of 1 4

VALUATION SUMMARY

VALUATION BY		STANDARD
Tax Group: 4	Tax Dist:	
BUILDING MARKET VALUE		280,485
TOTAL MARKET OB/XF VALUE		17,867
TOTAL LAND VALUE - MARKET		80,000
TOTAL MARKET VALUE		378,352
SOH/AGL Deduction		164,341
ASSESSED VALUE		214,011
TOTAL EXEMPTION VALUE	HX HB WX	55,000
BASE TAXABLE VALUE		159,011
TOTAL JUST VALUE		378,352
NCON VALUE		0
INCOME VALUE		
PREVIOUS YEAR MKT VALUE		301,621

PERMIT NUM	DESCRIPTION	AMT	ISSUED
22000742	REPAIR/RRF	34,809	01/12/2022
E9905838	CHNGE SRVC	0	04/01/1999
B9905864	SWIM POOL	21,920	03/01/1999
9602942	NEW CONSTR	169,834	07/16/1996

SALES DATA

OFF RECORD Number	DATE	TYPE INST	Q / U	V / I	RSN CD	SALE PRICE
2514/0664	7/28/2021	QC	U	I	11	100
GRANTOR: RICHEY SANDRA K (L/E)						
GRANTEE: RICHEY SANDRA K						
1933/1255	8/23/2014	LE	U	I	11	100
GRANTOR: RICHEY GARY L & SANDR						
GRANTEE: RICHEY ANTHONY JOSE						

BUILDING NOTES

EXTRA FEATURES

LN	OB/XF CODE	DESCRIPTION	BLD	CAP	L	W	UNITS	UT	Adj R	ADJ UNIT PRICE	ORIG COND	YEAR ON	YEAR ACTUAL	Q	% COND	OB/XF MKT VALUE	NOTES
1	0504	FP-ELECTRI	0	100	0	0	1.00	UT	2,000.00	2,000.00	100	1996	1996	3	80	1,600	
2	0810	CONCRETE A	0	100	0	0	474.00	SF	6.50	6.50	100	1996	1996	3	73	2,249	
3	0861	POOL GUNIT	0	100	0	0	388.00	SF	85.00	85.00	100	1999	1999	3	25	8,245	
4	0845	KOOL DECK	0	100	0	0	1,008.00	SF	7.25	7.25	100	1999	1999	3	79	5,773	

BUILDING DIMENSIONS

BAS=[YR=1996] W14 N6 W12 UOP=[YR=1999] N10 W44 S20 E10 N10 E34$ W34 S21 FGR=[YR=1996] W11 S24 E7 S2 E7 N2 E7 N20 W10 N4$ S4 E10 S12 E3 S6 E12 N6 FOP=[YR=1996] E5 S6 E30 N12 W5 S6 W16 N6 W14 S6$ N6 E14 S6 E16 N6 E5 N10 E3 N12 W3N3$ PTR=E15 FUS=[YR=1996] E15 N2 E12 S2 E16 S18 W20 S9 W13 N6 W10 N21$ W15$.

LAND DESCRIPTION

TOTAL OB/XF 17,867

LN	USE CODE	CLS	LAND USE DESCRIPTION	CAP	RD	LOC ZONE	FRONT	DEPTH	TOT LND UTS	UNIT TYPE	DT	DPTH FACT	% COND	TOT ADJ	UNIT PRICE	ADJ UNIT PRICE	LAND VALUE	OTHER ADJUSTMENTS AND NOTES	YEAR	DENSITY	DECL	FRZ	YR	CONSRV
1	000115	C	SFR ACRES	100	0002	RS-2	0.00	0.00	1.00	AC		1.00	1.00	1.00	80,000.00	80,000.00	80,000							

REVIEW DATE 01/11/2018 BY SBX Total Acres: 1.00 Total Land Value: 80,000 Market: 0 Agricultural: 0 Common: 80,000 PRINTED 08/02/2023 BY SYS