PT SEC 4-2N-26 IN OR 2551/269

SMITH ELIJAH & BROOKE
66092 WESTBERRY LANE
CALLAHAN, FL 32011

2023

04-2N-26-0000-0001-0030

BUILDING CHARACTERISTICS

ELEMENT	CD	CONSTRUCTION
Exterior Wall	16	WD FR STUC 100
Roof Structur	03	GABLE/HIP 100
Roof Cover	03	COMP SHNGL 100
Interior Wall	05	DRYWALL 100
Interior Floo	14	CARPET 60
Interior Floo	11	CLAY TILE 40
Air Condition	03	CENTRAL 100
Heating Type	04	AIR DUCTED 100
Bedrooms		4 100
Bathrooms		2 100
Frame	02	WOOD FRAME 100
Stories	1.	1. 100
Units		0 100
Occupancy	00	NONE 100
Quality	03	Quality Level 03
DOR CODE	0100	SINGLE FAMILY
MAP NUM		MKT AREA 05
NEIGHBORHOOD/LOC	5001.00	

AREA TYPE	TOTAL GROSS AREA	PCT OF BASE	TOT ADJ AREA	SUBAREA MARKET VALUE
BAS	1,517	100	1,517	180,897
DCK	64	10	6	716
FOP	104	30	31	3,697
FOP	152	30	46	5,485
STP	35	10	4	477
UST	48	45	22	2,623
TOTALS	1,920		1,626	193,895

MARKET ADJUSTMENTS

TYPE	MDL	EFF. AREA	TOT ADJ PTS	EFF. BASE RATE	REPL. COST NEW	AYB	EYB	ECON	FNCT		NORM	% COND
0900	01	1,626	119.5440	141.96	230,827	1950	1990	0	0	0	16.00	84.00

1 SNGL FAM – 0% - 2023 Heated Area: 1517 HX Base Yr

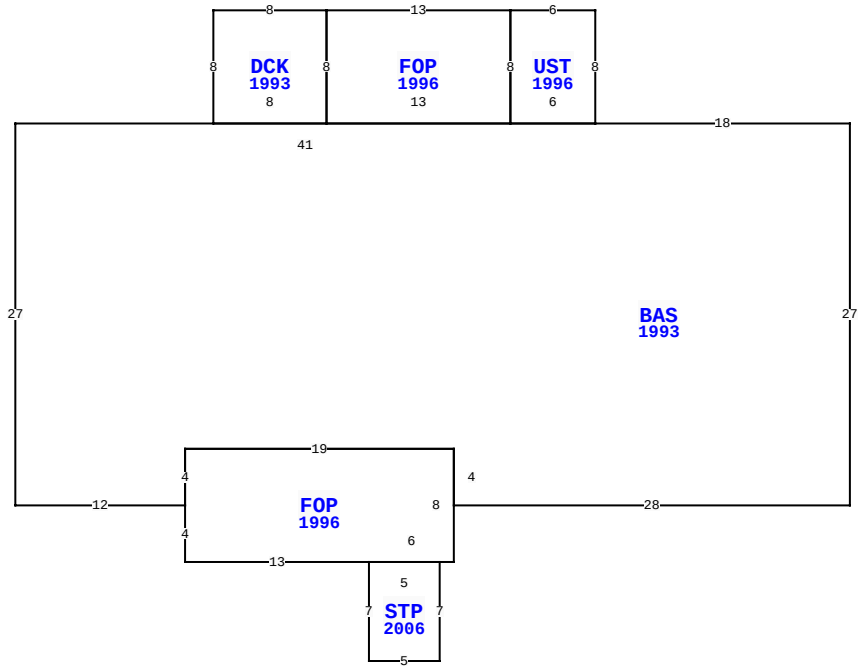

66092 WESTBERRY LN, CALLAHAN

BLD DATE	02/15/2007 JM	LGL DATE	
XF DATE		LAND DATE	
INC DATE		AG DATE	

NASSAU COUNTY PROPERTY

PAGE 1 of 1 4

VALUATION SUMMARY

VALUATION BY	STANDARD
Tax Group: 4	Tax Dist:
BUILDING MARKET VALUE	193,895
TOTAL MARKET OB/XF VALUE	13,507
TOTAL LAND VALUE - MARKET	49,050
TOTAL MARKET VALUE	256,452
SOH/AGL Deduction	0
ASSESSED VALUE	256,452
TOTAL EXEMPTION VALUE	0
BASE TAXABLE VALUE	256,452
TOTAL JUST VALUE	256,452
NCON VALUE	0
INCOME VALUE	
PREVIOUS YEAR MKT VALUE	203,929

PERMIT NUM	DESCRIPTION	AMT	ISSUED

SALES DATA

OFF RECORD Number	DATE	TYPE INST	Q / U	V / I	RSN CD	SALE PRICE
2551/0269	3/30/2022	WD	Q	I	01	390,000
GRANTOR: LATHROP JASON						
GRANTEE: SMITH ELIJAH & BROO						
1423/1184	6/27/2006	WD	U	I	07	100
GRANTOR: SERGENT VERA S & CURT						
GRANTEE: LATHROP JASON						

BUILDING NOTES

BUILDING DIMENSIONS

BAS=[YR=1993] W18 UST=[YR=1996] N8 W6 FOP=[YR=1996] W13 DCK=[YR=1993] W8 S8 E8 N8$ S8 E13 N8$ S8 E6$ W41 S27 E12 FOP=[YR=1996] S4 E13 STP=[YR=2006] S7 E5 N7 W5$ E6 N8 W19 S4$ N4 E19 S4 E28 N27$.

EXTRA FEATURES

LN	OB/XF CODE	DESCRIPTION	BLD	CAP	L	W	UNITS	UT	Adj R	ADJ UNIT PRICE	ORIG COND	YEAR ON	YEAR ACTUAL	Q	% COND	OB/XF MKT VALUE	NOTES
1	0810	CONCRETE A	0	0	0	0	104.00	SF	6.50	6.50	100	1996	1996	3	73	493	
2	0510	GARAGE WD-	0	0	32	18	576.00	SF	35.00	35.00	100	2006	2006	3	48	9,677	
3	1242	WD DECK A	0	0	0	0	407.00	SF	10.00	10.00	100	2017	2017	3	82	3,337	

LAND DESCRIPTION

TOTAL OB/XF 13,507

LN	USE CODE	CLS	LAND USE DESCRIPTION	CAP	RD	LOC ZONE	FRONT	DEPTH	TOT LND UTS	UNIT TYPE	DT	DPTH FACT	% COND	TOT ADJ	UNIT PRICE	ADJ UNIT PRICE	LAND VALUE	OTHER ADJUSTMENTS AND NOTES	YEAR	DENSITY	DECL	FRZ	YR	CONSRV
1	000115	C	SFR ACRES	0	0007	OR	0.00	0.00	1.09	AC		1.00	1.00	1.00	45,000.00	45,000.00	49,050							

REVIEW DATE 12/21/2021 BY KBA Total Acres: 1.09 Total Land Value: 49,050 Market: 0 Agricultural: 0 Common: 49,050 PRINTED 08/02/2023 BY SYS