PT NE1/4 OF SEC 4-2N-25E
IN OR 2324/386
ESMT IN OR 2356/255

HIGGINBOTHAM BRADFORD A
46050 GRUMPY WAY
CALLAHAN, FL 32011

2023

04-2N-25-0000-0002-0020

BUILDING CHARACTERISTICS

ELEMENT	CD	CONSTRUCTION
Exterior Wall	10	ABOVE AVG 90
Exterior Wall	21	STONE 10
Roof Structur	03	GABLE/HIP 100
Roof Cover	03	COMP SHNGL 100
Interior Wall	05	DRYWALL 100
Interior Floo	13	LVT/LAMNT 70
Interior Floo	11	CLAY TILE 30
Air Condition	03	CENTRAL 100
Heating Type	04	AIR DUCTED 100
Bedrooms		2 100
Bathrooms		3 100
Frame	02	WOOD FRAME 100
Stories	1.	1. 100
Units		0 100
Occupancy	00	NONE 100
Quality	01	Quality Level 01
DOR CODE	5000	IMPROVED AG
MAP NUM		MKT AREA 08
NEIGHBORHOOD/LOC	8026.00	

AREA TYPE	TOTAL GROSS AREA	PCT OF BASE	TOT ADJ AREA	SUBAREA MARKET VALUE
BAS	2,614	100	2,614	295,940
FGR	625	55	344	38,946
FOP	102	30	31	3,509
FOP	626	30	188	21,284
TOTALS	3,967		3,177	359,679

MARKET ADJUSTMENTS

TYPE	MDL	EFF. AREA	TOT ADJ PTS	EFF. BASE RATE	REPL. COST NEW	AYB	EYB	ECON	FNCT		NORM	% COND
0900	01	3,177	95.3856	113.27	359,859	2021	2021	0	0	0	0.05	99.95

1 SNGL FAM – 100% - 2022 Heated Area: 2614 HX Base Yr 2022

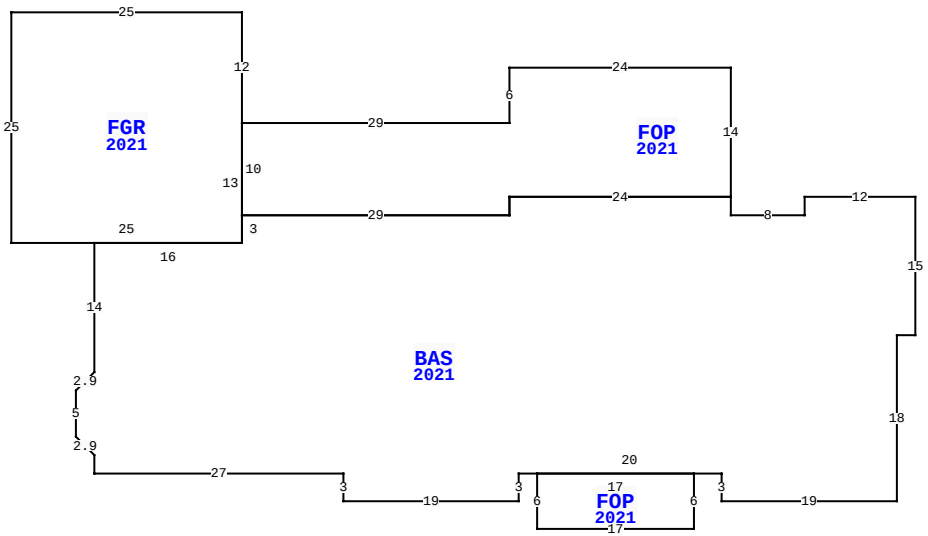

GRUMPY WAY, CALLAHAN

BLD DATE		LGL DATE	
XF DATE		LAND DATE	05/19/2023 MLU
INC DATE		AG DATE	

NASSAU COUNTY PROPERTY

PAGE 1 of 1 6

VALUATION SUMMARY

VALUATION BY		STANDARD
Tax Group: 6	Tax Dist:	
BUILDING MARKET VALUE		359,679
TOTAL MARKET OB/XF VALUE		0
TOTAL LAND VALUE - MARKET		247,100
TOTAL MARKET VALUE		401,620
SOH/AGL Deduction		12,965
ASSESSED VALUE		388,655
TOTAL EXEMPTION VALUE	HX HB	50,000
BASE TAXABLE VALUE		338,655
TOTAL JUST VALUE		606,779
NCON VALUE		0
INCOME VALUE		
PREVIOUS YEAR MKT VALUE		370,596

PERMIT NUM	DESCRIPTION	AMT	ISSUED
20000580	CO ISSUED	0	01/22/2021
2002112	NEW CONSTR	340,716	03/09/2020

SALES DATA

OFF RECORD Number	DATE	TYPE INST	Q / U	V / I	RSN CD	SALE PRICE
2324/0386	12/11/2019	WD	U	V	30	25,000

GRANTOR: MAURICE G HIGGINBOTHA

GRANTEE: HIGGINBOTHAM BRADFO

BUILDING NOTES

BUILDING DIMENSIONS

BAS=[YR=2021] W12 S2 W8 N2 FOP=[YR=2021] N14 W24 S6 W29
FGR=[YR=2021] N12 W25 S25 E25 N13$ S10 E29 N2 E24$ W24 S2 W29
S3 W16 S14 L2 D2 S5 R2 D2 S2 E27 S3 E19 N3 E2 FOP=[YR=2021]
S6 E17 N6 W17$ E20 S3 E19 N18 E2 N15$.

EXTRA FEATURES

LN	OB/XF CODE	DESCRIPTION	BLD	CAP	L	W	UNITS	UT	Adj R	ADJ UNIT PRICE	ORIG COND	YEAR ON	YEAR ACTUAL	Q	% COND	OB/XF MKT VALUE	NOTES

LAND DESCRIPTION

TOTAL OB/XF 0

LN	USE CODE	CLS	LAND USE DESCRIPTION	CAP	RD	LOC ZONE	FRONT	DEPTH	TOT LND UTS	UNIT TYPE	DT	DPTH FACT	% COND	TOT ADJ	UNIT PRICE	ADJ UNIT PRICE	LAND VALUE	OTHER ADJUSTMENTS AND NOTES	YEAR	DENSITY	DECL	FRZ	YR	CONSRV
1	005000	C	RURAL HOME	100			0.00	0.00	1.00	AC		1.00	1.00	1.00	35,000.00	35,000.00	35,000							
2	006005	A	PAST/GRAZE	0			0.00	0.00	9.00	AC		1.00	1.00	1.00	440.00	440.00	3,960							
3	005400	A	TIMBER 1 SI	0			0.00	0.00	4.14	AC		1.00	1.00	1.00	720.00	720.00	2,981							
4	009910	M	MKT.VAL.AG	0			0.00	0.00	14.14	AC		1.00	1.00	1.00	15,000.00	15,000.00	212,100							

REVIEW DATE 12/28/2020 BY KB Total Acres: 14.14 Total Land Value: 41,941 Market: 212,100 Agricultural: 6,941 Common: 35,000 PRINTED 08/02/2023 BY SYS