PT NE1/4 OF NE1/4 OF
SEC 4-2N-25E IN OR 2191/1728
ESMT IN OR 2356-957

PERKEY DAVID/BETANCOURT PRISCILLA
46644 SAULS ROAD
CALLAHAN, FL 32011

2023

04-2N-25-0000-0001-0080

NASSAU COUNTY PROPERTY

BUILDING CHARACTERISTICS

ELEMENT	CD	CONSTRUCTION
Exterior Wall	10	ABOVE AVG 100
Roof Structur	08	IRREGULAR 100
Roof Cover	03	COMP SHNGL 100
Interior Wall	05	DRYWALL 100
Interior Floo	08	SHT VINYL 70
Interior Floo	14	CARPET 30
Air Condition	03	CENTRAL 100
Heating Type	04	AIR DUCTED 100
Bedrooms		3 100
Bathrooms		3.5 100
Frame	02	WOOD FRAME 100
Stories	1.	1. 100
Units		0 100
Occupancy	00	NONE 100
Quality	05	Quality Level 05
DOR CODE	5000	IMPROVED AG
MAP NUM		MKT AREA 08
NEIGHBORHOOD/LOC	8026.00	

AREA TYPE	TOTAL GROSS AREA	PCT OF BASE	TOT ADJ AREA	SUBAREA MARKET VALUE
BAS	2,728	100	2,728	365,353
FGR	810	55	446	59,732
FOP	192	30	58	7,768
FSP	392	40	157	21,026
PTO	56	5	3	402
TOTALS	4,178		3,392	454,280

MARKET ADJUSTMENTS

TYPE	MDL	EFF. AREA	TOT ADJ PTS	EFF. BASE RATE	REPL. COST NEW	AYB	EYB	ECON	FNCT		NORM	% COND
0900	01	3,392	113.3440	134.60	456,563	2020	2020	0	0	0	0.50	99.50

1 SNGL FAM – 0% - 0 Heated Area: 2728 HX Base Yr

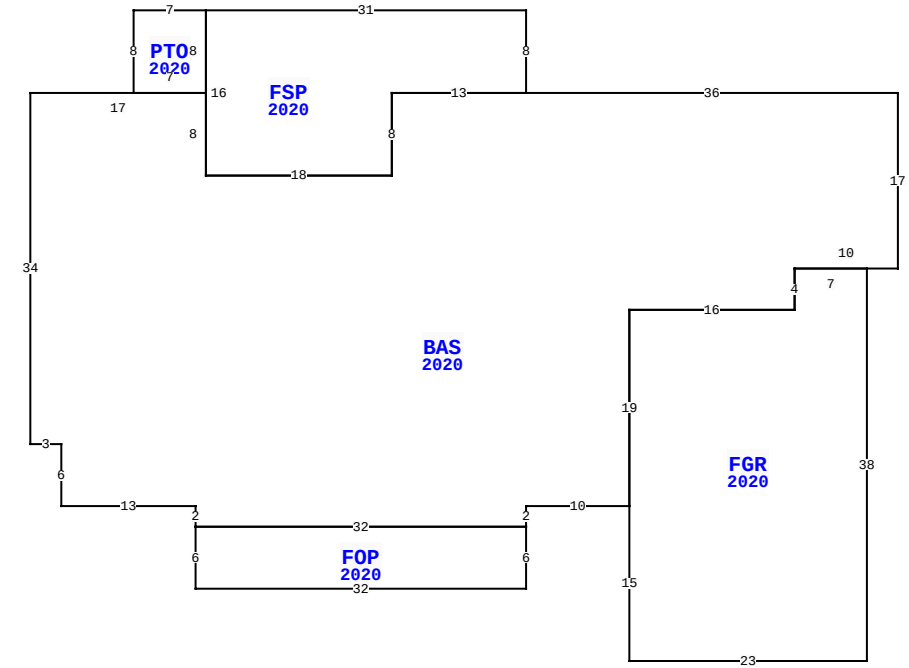

46644 SAULS RD, CALLAHAN

BLD DATE		LGL DATE	
XF DATE		LAND DATE	05/19/2023 MLU
INC DATE		AG DATE	

VALUATION SUMMARY

VALUATION BY	STANDARD
Tax Group: 6	Tax Dist:
BUILDING MARKET VALUE	454,280
TOTAL MARKET OB/XF VALUE	12,309
TOTAL LAND VALUE - MARKET	231,200
TOTAL MARKET VALUE	508,762
SOH/AGL Deduction	83,997
ASSESSED VALUE	424,765
TOTAL EXEMPTION VALUE	0
BASE TAXABLE VALUE	424,765
TOTAL JUST VALUE	697,789
NCON VALUE	0
INCOME VALUE	
PREVIOUS YEAR MKT VALUE	386,391

PERMIT NUM	DESCRIPTION	AMT	ISSUED
19009978	CO ISSUED	0	06/22/2020
19009978	NEW CONSTR	383,611	09/23/2019

SALES DATA

OFF RECORD Number	DATE	TYPE INST	Q U	V I	RSN CD	SALE PRICE
2191/1728	4/23/2018	SW	Q	V	01	110,000

GRANTOR: RAYDIENT LLC

GRANTEE: PERKEY DAVID & PRIS

BUILDING NOTES

BUILDING DIMENSIONS

BAS=[YR=2020] W36 FSP=[YR=2020] N8 W31 PTO=[YR=2020] W7 S8 E7 N8$ S16 E18 N8 E13$ W13 S8 W18 N8 W17 S34 E3 S6 E13 S2 FOP=[YR=2020] S6 E32 N6 W32$ E32 N2 E10 FGR=[YR=2020] S15 E23 N38 W7 S4 W16 S19$ N19 E16 N4 E10 N17$.

EXTRA FEATURES

LN	OB/XF CODE	DESCRIPTION	BLD	CAP	L	W	UNITS	UT	Adj R	ADJ UNIT PRICE	ORIG COND	YEAR ON	YEAR ACTUAL	Q	% COND	OB/XF MKT VALUE	NOTES
1	0500	FP-PRE FAB	0	0	0	0	1.00	UT	3,500.00	3,500.00	100	2020	2020	3	99	3,465	
2	0811	CONCRETE B	0	0	0	0	1,718.00	SF	5.20	5.20	100	2020	2020	3	99	8,844	

LAND DESCRIPTION

TOTAL OB/XF 12,309

LN	USE CODE	CLS	LAND USE DESCRIPTION	CAP	RD	LOC ZONE	FRONT	DEPTH	TOT LND UTS	UNIT TYPE	DT	DPTH FACT	% COND	TOT ADJ	UNIT PRICE	ADJ UNIT PRICE	LAND VALUE	OTHER ADJUSTMENTS AND NOTES	YEAR	DENSITY	DECL	FRZ	YR	CONSRV
1	005000	C	RURAL HOME	0			0.00	0.00	1.00	AC		1.00	1.00	1.00	35,000.00	35,000.00	35,000							
2	005400	A	TIMBER 1 SI	0			0.00	0.00	9.00	AC		1.00	1.00	1.00	720.00	720.00	6,480							
3	005901	A	HARDWOOD SI	0			0.00	0.00	3.08	AC		1.00	1.00	1.00	225.00	225.00	693							
4	009910	M	MKT.VAL.AG	0			0.00	0.00	13.08	AC		1.00	1.00	1.00	15,000.00	15,000.00	196,200							

REVIEW DATE 06/30/2020 BY KB Total Acres: 13.08 Total Land Value: 42,173 Market: 196,200 Agricultural: 7,173 Common: 35,000 PRINTED 08/02/2023 BY SYS