LOT 13
THE POINTE @ LONG POINT
PB 6/155-156

WOLF THOMAS W & BARBARA REV LIVING TRUST/WOLF THOM
150 LONG POINT DR
FERNANDINA BEACH, FL 32034

2023

03-6N-29-00TP-0013-0000

BUILDING CHARACTERISTICS

ELEMENT	CD	CONSTRUCTION
Exterior Wall	16	WD FR STUC 70
Exterior Wall	17	CB STUCCO 30
Roof Structur	08	IRREGULAR 100
Roof Cover	03	COMP SHNGL 100
Interior Wall	05	DRYWALL 100
Interior Floo	12	HARDWOOD 50
Interior Floo	14	CARPET 50
Air Condition	03	CENTRAL 100
Heating Type	04	AIR DUCTED 100
Bedrooms		4 100
Bathrooms		4.5 100
Frame	02	WOOD FRAME 100
Stories	3.	3. 100
Units		0 100
Quality	05	Quality Level 05
DOR CODE	0100	SINGLE FAMILY
MAP NUM		MKT AREA 10
NEIGHBORHOOD/LOC	10007.00	

AREA TYPE	TOTAL GROSS AREA	PCT OF BASE	TOT ADJ AREA	SUBAREA MARKET VALUE
BAS	1,169	100	1,169	226,505
DCK	56	10	6	1,162
DCK	80	10	8	1,550
DCK	108	10	11	2,132
FGR	1,373	55	755	146,289
FOP	108	30	32	6,200
FOP	365	30	110	21,314
FOP	540	30	162	31,389
FOP	660	30	198	38,364
FST	126	55	69	13,369
TOTALS	9,750		7,242	1,403,209

MARKET ADJUSTMENTS

TYPE	MDL	EFF. AREA	TOT ADJ PTS	EFF. BASE RATE	REPL. COST NEW	AYB	EYB	ECON	FNCT		NORM	% COND
0500	11	7,242	142.3784	202.89	1,469,329	2002	2013	0	0	0	4.50	95.50

1 SFR CUST – 100% - 2023 Heated Area: 5687 HX Base Yr 2023

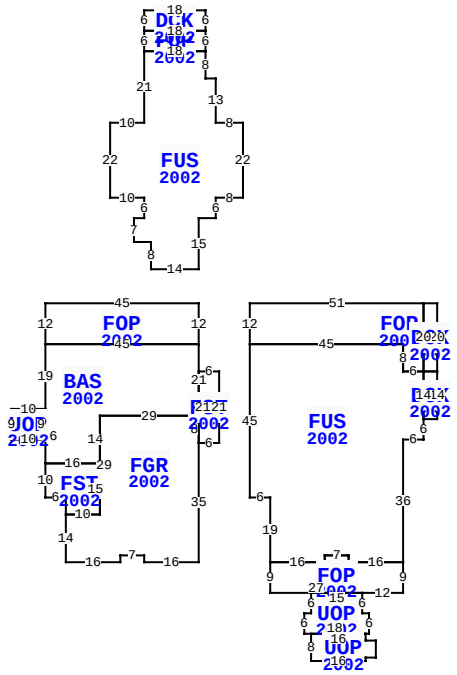

** This building has 16 Sub-Areas

150 LONG POINT DR, FERNANDINA BEACH

BLD DATE		LGL DATE	
XF DATE		LAND DATE	
INC DATE		AG DATE	

NASSAU COUNTY PROPERTY

PAGE 1 of 1 5

VALUATION SUMMARY

VALUATION BY		STANDARD
Tax Group: 5	Tax Dist:	
BUILDING MARKET VALUE		1,403,209
TOTAL MARKET OB/XF VALUE		20,994
TOTAL LAND VALUE - MARKET		650,000
TOTAL MARKET VALUE		2,074,203
SOH/AGL Deduction		313,430
ASSESSED VALUE		1,760,773
TOTAL EXEMPTION VALUE	HX HB	50,000
BASE TAXABLE VALUE		1,710,773
TOTAL JUST VALUE		2,074,203
NCON VALUE		0
INCOME VALUE		
PREVIOUS YEAR MKT VALUE		1,334,593

PERMIT NUM	DESCRIPTION	AMT	ISSUED
20010724	SWIM POOL	0	01/01/2021
B0108025	NEW CONSTR	400,000	02/01/2001

SALES DATA

OFF RECORD Number	DATE	TYPE INST	Q U	V I	RSN CD	SALE PRICE
2646/1620	6/08/2023	QC	U	I	11	100
GRANTOR: WOLF THOMAS W & BARBA						
GRANTEE: WOLF THOMAS W & BAR						
2559/0248	4/26/2022	WD	Q	I	02	2,625,000
GRANTOR: QUACKENBUSH GLENN W &						
GRANTEE: WOLF THOMAS W & BAR						

BUILDING NOTES

EXTRA FEATURES

LN	OB/XF CODE	DESCRIPTION	BLD	CAP	L	W	UNITS	UT	Adj R	ADJ UNIT PRICE	ORIG COND	YEAR ON	YEAR ACTUAL	Q	% COND	OB/XF MKT VALUE	NOTES
2	0825	BRICK	0	100	0	0	140.00	SF	12.50	12.50	100	2002	2002	3	95	1,663	
3	0504	FP-ELECTRI	0	100	0	0	1.00	UT	2,000.00	2,000.00	100	2002	2002	3	87	1,740	
4	0855	CONC PAVER	0	100	0	0	2,022.00	SF	10.00	10.00	100	2005	2005	3	87	17,591	

BUILDING DIMENSIONS

FOP=[YR=2002] W45 S12 BAS=[YR=2002] S19 UOP=[YR=2002] W10 S9 E10 N9 $S16 FST=[YR=2002] S10 E6 S5 FGR=[YR=2002] S14 E16 N2 E7 S2 E16 N35 FST=[YR=2002] E6 N21 W6 S21 $ N8 W29 S29 W10 $ E10 N15 W16 $ E16 N14 E29 N21 W45 $ E45 N12 $ PTR= E15 FOP=[YR=2002] E51 DCK=[YR=2002] E4 S20 DCK=[YR=2002] S14 W4 FUS=[YR=2002] S6 W6 S36 FOP=[YR=2002] S9 W12 UOP=[YR=2002] S6 E2 S6 W1 UOP=[YR=2002] S2 E3 S5 W3 S1 W16 N8 E16 $ W18 N6 E2 N6 E15 $ W27 N9 E16 N2 E7 S2 E16 $ W16 N2 W7 S2 W16 N19 W6 N45 E45 S8 E6 S14 $ N14 E4 $ W4 N20 $ S20 W6 N8 W45 N12 $ W15 $ PTR= N10 FUS=[YR=2002] N15 E5 N6 E8 N22 W8 N13 W3 N8 FOP=[YR=2002] N6 DCK=[YR=2002] N6 W18 S6 E18 $ W18 S6 E18 $ W18 S21 W10 S22 E10 S6 W3 S7 E5 S8 E14 $ S10 $.

LAND DESCRIPTION

TOTAL OB/XF 20,994

LN	USE CODE	CLS	LAND USE DESCRIPTION	CAP	RD	LOC ZONE	FRONT	DEPTH	TOT LND UTS	UNIT TYPE	DT	DPTH FACT	% COND	TOT ADJ	UNIT PRICE	ADJ UNIT PRICE	LAND VALUE	OTHER ADJUSTMENTS AND NOTES	YEAR	DENSITY	DECL	FRZ	YR	CONSRV
1	000140	C	SFR GOLF A	100			0.00	0.00	1.00	LT		1.00	1.00	1.00	650,000.00	650,000.00	650,000							

REVIEW DATE 07/29/2016 BY DJ Total Acres: 0.00 Total Land Value: 650,000 Market: 0 Agricultural: 0 Common: 650,000 PRINTED 08/02/2023 BY SYS