LOT 6
IN OR 2209/1216
OAK POINT @ LONG POINT PB5/187

CHRISTENSEN GARY L & BARBARA E
11 OAK POINT DRIVE
FERNANDINA BEACH, FL 32034

2023

03-6N-29-00OP-0006-0000

NASSAU COUNTY PROPERTY

BUILDING CHARACTERISTICS

ELEMENT	CD	CONSTRUCTION
Exterior Wall	10	ABOVE AVG 80
Exterior Wall	17	CB STUCCO 20
Roof Structur	08	IRREGULAR 100
Roof Cover	03	COMP SHNGL 100
Interior Wall	05	DRYWALL 90
Interior Wall	08	DECORATIVE 10
Interior Floo	14	CARPET 70
Interior Floo	11	CLAY TILE 30
Air Condition	03	CENTRAL 100
Heating Type	04	AIR DUCTED 100
Bedrooms		3 100
Bathrooms		3 100
Frame	02	WOOD FRAME 100
Stories	3.	3. 100
Units		0 100
Occupancy	00	NONE 100
Quality	04	Quality Level 04
DOR CODE	0100	SINGLE FAMILY
MAP NUM		MKT AREA 10
NEIGHBORHOOD/LOC	10007.00	

AREA TYPE	TOTAL GROSS AREA	PCT OF BASE	TOT ADJ AREA	SUBAREA MARKET VALUE
BAS	66	100	66	8,696
FGR	702	55	386	50,859
FOP	132	30	40	5,270
FSP	190	40	76	10,014
FST	20	55	11	1,450
FST	234	55	129	16,997
FST	316	55	174	22,927
FUS	1,025	100	1,025	135,054
FUS	2,028	100	2,028	267,209
UOP	72	20	14	1,845
TOTALS	5,263		4,045	532,970

MARKET ADJUSTMENTS

TYPE	MDL	EFF. AREA	TOT ADJ PTS	EFF. BASE RATE	REPL. COST NEW	AYB	EYB	ECON	FNCT		NORM	% COND
0500	01	4,045	104.5968	149.05	602,907	1998	1998	0	0	0	11.60	88.40

1 SFR CUST – 100% - 2005 Heated Area: 3119 HX Base Yr 2005

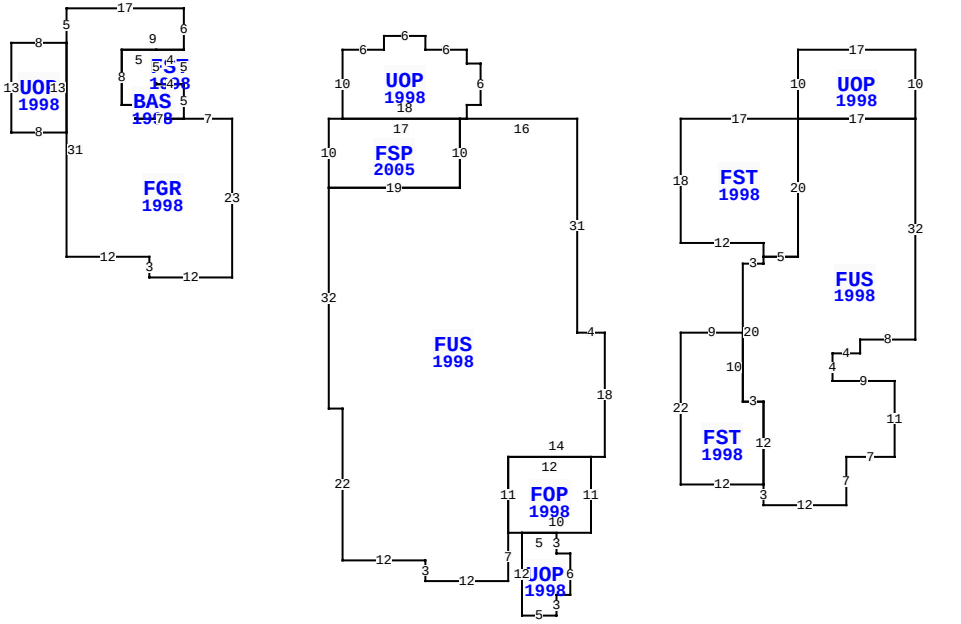

** This building has 13 Sub-Areas

11 OAK POINT DR, FERNANDINA BEACH

BLD DATE		LGL DATE	
XF DATE		LAND DATE	
INC DATE		AG DATE	

VALUATION SUMMARY

VALUATION BY		STANDARD
Tax Group: 5	Tax Dist:	
BUILDING MARKET VALUE		532,970
TOTAL MARKET OB/XF VALUE		26,456
TOTAL LAND VALUE - MARKET		500,000
TOTAL MARKET VALUE		1,059,426
SOH/AGL Deduction		370,894
ASSESSED VALUE		688,532
TOTAL EXEMPTION VALUE	HX HB	50,000
BASE TAXABLE VALUE		638,532
TOTAL JUST VALUE		1,059,426
NCON VALUE		0
INCOME VALUE		
PREVIOUS YEAR MKT VALUE		822,274

PERMIT NUM	DESCRIPTION	AMT	ISSUED
M1217688	H/AC	0	10/01/2012
R08048	REPAIR/RRF	1,800	08/01/2005
B9703870	NEW CONSTR	358,000	04/01/1997

SALES DATA

OFF RECORD Number	DATE	TYPE INST	Q U /	V I /	RSN CD	SALE PRICE
2209/1216	6/13/2018	TD	U	I	11	100
GRANTOR: CHRISTENSEN BARBARA E						
GRANTEE: CHRISTENSEN BARBARA						
1254/0376	8/20/2004	WD	U	I	07	100
GRANTOR: CAPECE ANTHONY & JOYC						
GRANTEE: CHRISTENSEN BARBARA						

BUILDING NOTES

BUILDING DIMENSIONS

FUS=[YR=1998] W16 UOP=[YR=1998] N2 E2 N6 W2 N2 W6 N2 W6 S2 W6 S10 FSP=[YR=2005] W2 S10 E19 N10 W17$ E18$ W1 S10 W19 S32 E2 S22 E12 S3 E12 N7 FOP=[YR=1998] E2 UOP=[YR=1998] S12 E5 N3 E2 N6 W2 N3 W5$ E10 N11 W12 S11$ N11 E14 N18 W4 N31$ PTR= E15 FST=[YR=1998] E17 UOP=[YR=1998] N10 E17 S10 W17 $ FUS=[YR=1998] E17 S32 W8 S2 W4 S4 E9 S11 W7 S7 W12 N3 FST=[YR=1998] N12 W3 N10 W9 S22 E12 $ N12 W3 N20 E3 N1 E5 N20 $ S20 W5 N2 W12 N18 $ W15 $ PTR = W50 FGR=[YR=1998] W7 BAS=[YR=1998] N5 FST=[YR=1998] N5 W4 S5 E4 $ W4 N5 W5 S8 E2 S2 E7 $ W7 N2 W2 N8 E9 N6 W17 S5 UOP=[YR=1998] W8 S13 E8 N13 $ S31 E12 S3 E12 N23 $ E50 $.

EXTRA FEATURES

LN	OB/XF CODE	DESCRIPTION	BLD	CAP	L	W	UNITS	UT	Adj R	ADJ UNIT PRICE	ORIG COND	YEAR ON	YEAR ACTUAL	Q	% COND	OB/XF MKT VALUE	NOTES
1	0504	FP-ELECTRI	0	100	0	0	1.00	UT	2,000.00	2,000.00	100	1998	1998	3	83	1,660	
2	0855	CONC PAVER	0	100	0	0	1,620.00	SF	7.00	7.00	100	2009	2009	3	91	10,319	
3	0855	CONC PAVER	0	100	0	0	492.00	SF	10.00	10.00	100	2009	2009	3	91	4,477	
4	0410	ELEVATOR	0	100	0	0	1.00	UT	10,000.00	10,000.00	100	1998	1998	3	100	10,000	

LAND DESCRIPTION

TOTAL OB/XF 26,456

LN	USE CODE	CLS	LAND USE DESCRIPTION	CAP	RD	LOC ZONE	FRONT	DEPTH	TOT LND UTS	UNIT TYPE	DT	DPTH FACT	% COND	TOT ADJ	UNIT PRICE	ADJ UNIT PRICE	LAND VALUE	OTHER ADJUSTMENTS AND NOTES	YEAR	DENSITY	DECL	FRZ	YR	CONSRV
1	000140	C	SFR GOLF A	100		PUD	0.00	0.00	1.00	LT		1.00	1.00	1.00	500,000.00	500,000.00	500,000							

REVIEW DATE 05/03/2018 BY DJX Total Acres: 0.00 Total Land Value: 500,000 Market: 0 Agricultural: 0 Common: 500,000 PRINTED 08/02/2023 BY SYS