LOT 70 & S1/2 OF LOT 71
EX N1/2 OF LOT 71
LONG POINT #1 PB 5/85-89

CORBEIL FLORIDA TRUST/CORBEIL STEPHEN E TRUSTEE
26 SALT MARSH DR
FERNANDINA BEACH, FL 32034

2023

03-6N-29-00LP-0070-0000

NASSAU COUNTY PROPERTY

BUILDING CHARACTERISTICS

ELEMENT	CD	CONSTRUCTION
Exterior Wall	10	ABOVE AVG 70
Exterior Wall	14	WD SHINGLE 30
Roof Structur	08	IRREGULAR 100
Roof Cover	03	COMP SHNGL 100
Interior Wall	05	DRYWALL 90
Interior Wall	06	CUST PANEL 10
Interior Floo	12	HARDWOOD 50
Interior Floo	14	CARPET 50
Air Condition	03	CENTRAL 100
Heating Type	04	AIR DUCTED 100
Bedrooms		4 100
Bathrooms		4.5 100
Frame	02	WOOD FRAME 100
Stories	2.	2. 100
Units		0 100
Quality	05	Quality Level 05
DOR CODE	0100	SINGLE FAMILY
MAP NUM		MKT AREA 10
NEIGHBORHOOD/LOC	10007.00	

AREA TYPE	TOTAL GROSS AREA	PCT OF BASE	TOT ADJ AREA	SUBAREA MARKET VALUE
BAS	3,358	100	3,358	918,008
FEP	43	80	34	9,295
FGR	962	55	529	144,618
FOP	7	30	2	547
FOP	7	30	2	547
FOP	52	30	16	4,374
FOP	56	30	17	4,648
FOP	224	30	67	18,316
FOP	312	30	94	25,698
FOP	401	30	120	32,805
TOTALS	11,098		8,042	2,198,515

MARKET ADJUSTMENTS

TYPE	MDL	EFF. AREA	TOT ADJ PTS	EFF. BASE RATE	REPL. COST NEW	AYB	EYB	ECON	FNCT		NORM	% COND
0500	12	8,042	203.3352	289.75	2,330,170	1999	2010	0	0	0	5.65	94.35

1 SFR CUST – 100% - 2021 Heated Area: 6423 HX Base Yr 2021

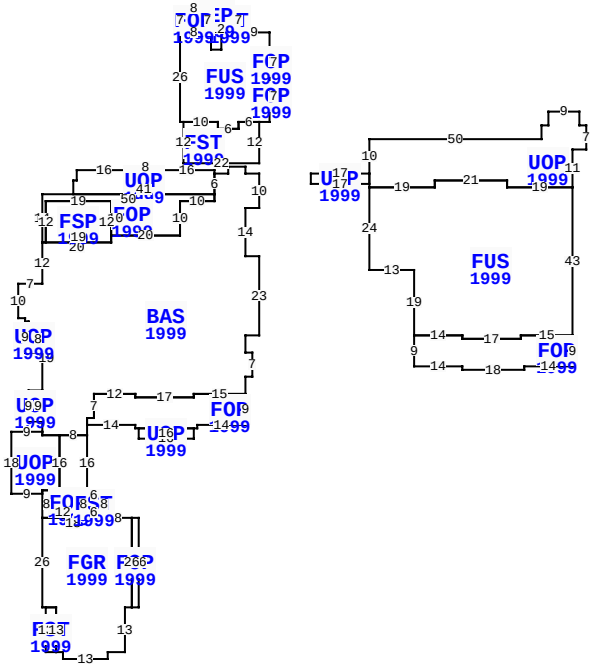

** This building has 25 Sub-Areas

26 SALT MARSH DR, FERNANDINA BEACH

BLD DATE		LGL DATE	
XF DATE		LAND DATE	
INC DATE		AG DATE	

VALUATION SUMMARY

VALUATION BY		STANDARD
Tax Group: 5	Tax Dist:	
BUILDING MARKET VALUE		2,569,671
TOTAL MARKET OB/XF VALUE		155,001
TOTAL LAND VALUE - MARKET		860,000
TOTAL MARKET VALUE		3,584,672
SOH/AGL Deduction		1,127,800
ASSESSED VALUE		2,456,872
TOTAL EXEMPTION VALUE	HX HB	50,000
BASE TAXABLE VALUE		2,406,872
TOTAL JUST VALUE		3,584,672
NCON VALUE		3,850
INCOME VALUE		
PREVIOUS YEAR MKT VALUE		2,719,914

PERMIT NUM	DESCRIPTION	AMT	ISSUED
21013409	ADDITION	17,000	10/01/2021
B2006279	REMODEL	300,000	07/20/2020
G1201713	GAS PIPE	600	03/01/2012
E24401	TEMP POLE	10,000	12/01/2011
E23712	ELEC OTHER	0	08/01/2011
E23734	ELEC OTHER	0	08/01/2011

SALES DATA

OFF RECORD Number	DATE	TYPE INST	Q / U	V / I	RSN CD	SALE PRICE
2374/1976	7/07/2020	WD	Q	I	01	2,732,000
GRANTOR: WILLIAM H GOWER QUALI						
GRANTEE: CORBEIL FLORIDA TRU						
2106/0848	2/28/2017	TD	U	I	11	100
GRANTOR: GOWER GAYLE B REVOCAB						
GRANTEE: GOWER GAYLE B GST E						

BUILDING NOTES

BUILDING DIMENSIONS

BAS=[YR=1999] W4 N2 W5 S2W4 UOP=[YR=1999] N1 W16 N1 W8
S1W16S3W1 S4 E41 N6 $ S6 FOP=[YR=1999] W50 S14
E1FSP=[YR=1999] E19N12W19 S12 $ N12E19S10E20N10E10N2$ S2W10
S10W20S2W20S12 W7S10E2S1 UOP=[YR=1999] S9E5N8W4N1W1$E1S1E4S19
UOP=[YR=1999] W4S9E4N9$ S12UOP=[YR=1999]
W9S18E9N1E5N16W5N1$S1 E5 FOP=[YR=1999] S16 W5 S8FGR=[YR=1999]
S26 E1FST=[YR=1999] S13E3N13W3$ E3S13E2
S2E13N2E5N13E2FOP=[YR=1999] E2N26W2 S26$N26W8FST=[YR=1999]
N8W6S8E6$W18$ E12N8E1N16W8$E8N3FOP=[YR=1999] E14S1
E1UOP=[YR=1999] S3E16N3W16$E17N1E14
N9W15S1W17N1W12S7W2S2$N2E2N7 E12S1E17N1E15N5E2N7W2N5E4N23W4
N14E4N10$ PTR=E15UOP=[YR=1999] E17 UOP=[YR=1999]

EXTRA FEATURES

LN	OB/XF CODE	DESCRIPTION	BLD	CAP	L	W	UNITS	UT	Adj R	ADJ UNIT PRICE	ORIG COND	YEAR ON	YEAR ACTUAL	Q	% COND	OB/XF MKT VALUE	NOTES
1	0504	FP-ELECTRI	0	100	0	0	2.00	UT	2,000.00	2,000.00	100	1999	1999	3	84	3,360	
2	0810	CONCRETE A	0	100	0	0	1,043.00	SF	6.50	6.50	100	1999	1999	3	79	5,356	
3	0825	BRICK	0	100	0	0	752.00	SF	12.50	12.50	100	1999	1999	3	94	8,836	
4	0463	FENCE GATE	0	100	0	0	4.00	UT	300.00	300.00	100	1999	1999	3	52	624	
5	0825	BRICK	0	100	0	0	896.00	SF	12.50	12.50	100	1999	1999	3	94	10,528	
6	1126	CB/STC 8"	0	100	0	0	653.00	SF	8.00	8.00	100	1999	1999	3	79	4,127	
7	0825	BRICK	0	100	0	0	2,460.00	SF	12.50	12.50	100	2012	2012	3	98	30,135	
8	1128	BRICK 12"	0	100	0	0	66.00	SF	14.00	14.00	100	1999	1999	3	94	869	
9	0825	BRICK	0	100	0	0	330.00	SF	8.75	8.75	100	2012	2012	3	98	2,830	
10	1128	BRICK 12"	0	100	0	0	603.00	SF	14.00	14.00	100	2012	2012	3	98	8,273	

TOTAL OB/XF 74,938

LAND DESCRIPTION

LN	USE CODE	CLS	LAND USE DESCRIPTION	CAP	RD	LOC ZONE	FRONT	DEPTH	TOT LND UTS	UNIT TYPE	DT	DPTH FACT	% COND	TOT ADJ	UNIT PRICE	ADJ UNIT PRICE	LAND VALUE	OTHER ADJUSTMENTS AND NOTES	YEAR	DENSITY	DECL	FRZ	YR	CONSRV
1	000116	C	SFR MARSH	100		PUD	0.00	0.00	1.00	LT		1.00	1.00	1.00	650,000.00	650,000.00	650,000							
2	000116	C	SFR MARSH	100		PUD	0.00	0.00	0.50	LT		1.00	1.00	0.70	600,000.00	420,000.00	210,000							

REVIEW DATE 06/21/2022 BY DJ Total Acres: 0.00 Total Land Value: 860,000 Market: 0 Agricultural: 0 Common: 860,000 PRINTED 08/02/2023 BY SYS

LOT 70 & S1/2 OF LOT 71
EX N1/2 OF LOT 71
LONG POINT #1 PB 5/85-89

CORBEIL FLORIDA TRUST/CORBEIL STEPHEN E TRUSTEE
26 SALT MARSH DR
FERNANDINA BEACH, FL 32034

2023

03-6N-29-00LP-0070-0000

BUILDING CHARACTERISTICS

ELEMENT	CD	CONSTRUCTION
Exterior Wall	17	CB STUCCO 100
Roof Structur	03	GABLE/HIP 100
Roof Cover	03	COMP SHNGL 100
Interior Wall	05	DRYWALL 100
Interior Floo	12	HARDWOOD 60
Interior Floo	11	CLAY TILE 40
Air Condition	03	CENTRAL 100
Heating Type	04	AIR DUCTED 100
Bedrooms		0 100
Bathrooms		1 100
Frame	03	MASONRY 100
Stories	1.	1. 100
Units		0 100
Quality	06	Quality Level 06
DOR CODE	0100	SINGLE FAMILY
MAP NUM		MKT AREA 10
NEIGHBORHOOD/LOC	10007.00	

AREA TYPE	TOTAL GROSS AREA	PCT OF BASE	TOT ADJ AREA	SUBAREA MARKET VALUE
BAS	1,020	100	1,020	223,879
FOP	138	30	41	8,999
FOP	240	30	72	15,803
FOP	265	30	80	17,559
STP	48	10	5	1,097
UOP	2,365	20	473	103,819
TOTALS	4,076		1,691	371,156

MARKET ADJUSTMENTS

TYPE	MDL	EFF. AREA	TOT ADJ PTS	EFF. BASE RATE	REPL. COST NEW	AYB	EYB	ECON	FNCT		NORM	% COND
0500	11	1,691	159.6120	227.45	384,618	2012	2015	0	0	0	3.50	96.50

2 SFR CUST – 100% - 2021 Heated Area: 1020 HX Base Yr 2021

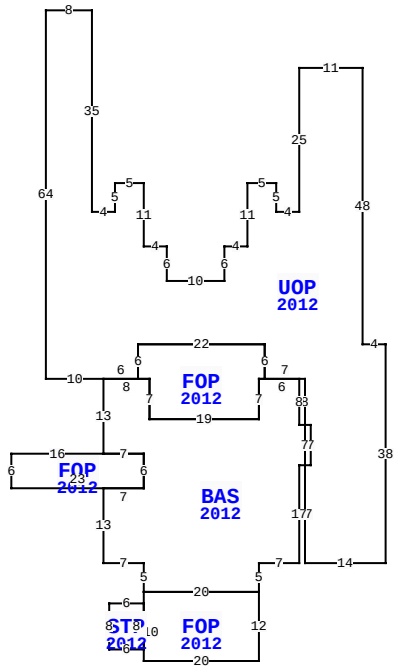

26 SALT MARSH DR, FERNANDINA BEACH

BLD DATE		LGL DATE	
XF DATE		LAND DATE	
INC DATE		AG DATE	

NASSAU COUNTY PROPERTY

PAGE 2 of 2 5

VALUATION SUMMARY

VALUATION BY		STANDARD
Tax Group: 5	Tax Dist:	
BUILDING MARKET VALUE		2,569,671
TOTAL MARKET OB/XF VALUE		155,001
TOTAL LAND VALUE - MARKET		860,000
TOTAL MARKET VALUE		3,584,672
SOH/AGL Deduction		1,127,800
ASSESSED VALUE		2,456,872
TOTAL EXEMPTION VALUE	HX HB	50,000
BASE TAXABLE VALUE		2,406,872
TOTAL JUST VALUE		3,584,672
NCON VALUE		3,850
INCOME VALUE		
PREVIOUS YEAR MKT VALUE		2,719,914

PERMIT NUM	DESCRIPTION	AMT	ISSUED
M16444	H/AC	0	08/01/2011
P14928	NEW CONSTR	0	08/01/2011
B24618	SWIM POOL	200,000	04/01/2011
B24476	ADDITION	119,423	03/01/2011
B9804649	NEW CONSTR	698,100	02/01/1998

SALES DATA

OFF RECORD Number	DATE	TYPE INST	Q U	V I	RSN CD	SALE PRICE
2374/1976	7/07/2020	WD	Q	I	01	2,732,000
GRANTOR: WILLIAM H GOWER QUALI						
GRANTEE: CORBEIL FLORIDA TRU						
2106/0848	2/28/2017	TD	U	I	11	100
GRANTOR: GOWER GAYLE B REVOCAB						
GRANTEE: GOWER GAYLE B GST E						

BUILDING NOTES

BUILDING DIMENSIONS

UOP=[YR=2012] W11 S25 W4 N5 W5 S11 W4 S6 W10 N6 W4 N11 W5 S5 W4 N35 W8 S64 E10 BAS=[YR=2012] S13 FOP=[YR=2012] W16 S6 E23 N6 W7$ E7 S6 W7 S13 E7 S5 FOP=[YR=2012] S2 STP=[YR=2012] W6 S8 E6 N8$ S10 E20 N12 W20$ E20 N5 E7 N17 E1 N7 W1 N8 W6 FOP=[YR=2012] N6 W22 S6 E2 S7 E19 N7 E1$ W1 S7 W19 N7 W8$ E6 N6 E22 S6 E7 S8 E1 S7 W1 S17 E14 N38 W4 N48$.

EXTRA FEATURES

LN	OB/XF CODE	DESCRIPTION	BLD	CAP	L	W	UNITS	UT	Adj R	ADJ UNIT PRICE	ORIG COND	YEAR ON	YEAR ACTUAL	Q	% COND	OB/XF MKT VALUE	NOTES
11	0463	FENCE GATE	0	100	0	0	4.00	UT	300.00	300.00	100	2012	2012	3	85	1,020	
12	0462	ST/AL FNC	0	100	63	0	252.00	SF	10.00	10.00	100	2012	2012	3	71	1,789	
13	1128	BRICK 12"	0	100	0	0	32.00	SF	14.00	14.00	100	2012	2012	3	98	439	
14	1126	CB/STC 8"	0	100	0	0	313.00	SF	8.00	8.00	100	2012	2012	3	94	2,354	
15	0600	SUMMER KIT	0	100	0	0	1.00	UT	5,000.00	5,000.00	100	2012	2012	3	60	3,000	
16	0861	POOL GUNIT	0	100	0	0	1,018.00	SF	85.00	85.00	100	2012	2012	3	71	61,436	
17	0871	POOL HTR R	0	100	0	0	1.00	UT	2,000.00	2,000.00	100	2012	2012	3	60	1,200	
18	0500	FP-PRE FAB	0	100	0	0	1.00	UT	3,500.00	3,500.00	100	2012	2012	3	96	3,360	
19	1075	TRELLIS G	0	100	10	13	130.00	SF	17.50	17.50	100	2012	2012	3	71	1,615	
20	0911	SCRN RM A	0	100	0	0	220.00	SF	17.50	17.50	100	2022	2022	3	100	3,850	

TOTAL OB/XF 80,063

LAND DESCRIPTION

LN	USE CODE	CLS	LAND USE DESCRIPTION	CAP	RD	LOC ZONE	FRONT	DEPTH	TOT LND UTS	UNIT TYPE	DT	DPTH FACT	% COND	TOT ADJ	UNIT PRICE	ADJ UNIT PRICE	LAND VALUE	OTHER ADJUSTMENTS AND NOTES	YEAR	DENSITY	DECL	FRZ	YR	CONSRV

REVIEW DATE 06/21/2022 BY DJ Total Acres: 0.00 Total Land Value: 860,000 Market: 0 Agricultural: 0 Common: 860,000 PRINTED 08/02/2023 BY SYS