LOT 66
LONG POINT #1 PB 5/85-89

SCHROEDER R TRUST NO 1/SCHROEDER ROBERT TRUSTEE
18 SALT MARSH DRIVE
FERNANDINA BEACH, FL 32034

2023

03-6N-29-00LP-0066-0000

BUILDING CHARACTERISTICS

ELEMENT	CD	CONSTRUCTION
Exterior Wall	17	CB STUCCO 60
Exterior Wall	16	WD FR STUC 40
Roof Structur	04	WOOD TRUSS 100
Roof Cover	07	CONC TILE 100
Interior Wall	05	DRYWALL 100
Interior Floo	15	HARDTILE 70
Interior Floo	14	CARPET 30
Air Condition	03	CENTRAL 100
Heating Type	04	AIR DUCTED 100
Bedrooms		3 100
Bathrooms		5 100
Frame	02	WOOD FRAME 100
Stories	2.	2. 100
Units		0 100
Quality	06	Quality Level 06
DOR CODE	0100	SINGLE FAMILY
MAP NUM		MKT AREA 10
NEIGHBORHOOD/LOC	10007.00	

AREA TYPE	TOTAL GROSS AREA	PCT OF BASE	TOT ADJ AREA	SUBAREA MARKET VALUE
BAS	3,169	100	3,169	1,038,550
FGR	827	55	455	149,114
FOP	94	30	28	9,176
FOP	656	30	197	64,561
FSP	1,119	40	448	146,820
FST	48	55	26	8,521
FUS	1,520	100	1,520	498,137
PTO	32	5	2	656
PTO	72	5	4	1,311
UOP	119	20	24	7,865
TOTALS	8,971		6,135	2,010,573

MARKET ADJUSTMENTS

TYPE	MDL	EFF. AREA	TOT ADJ PTS	EFF. BASE RATE	REPL. COST NEW	AYB	EYB	ECON	FNCT		NORM	% COND
0500	12	6,135	234.6738	334.41	2,051,605	2008	2018	0	0	0	2.00	98.00

1 SFR CUST – 100% - 2023 Heated Area: 4689 HX Base Yr 2023

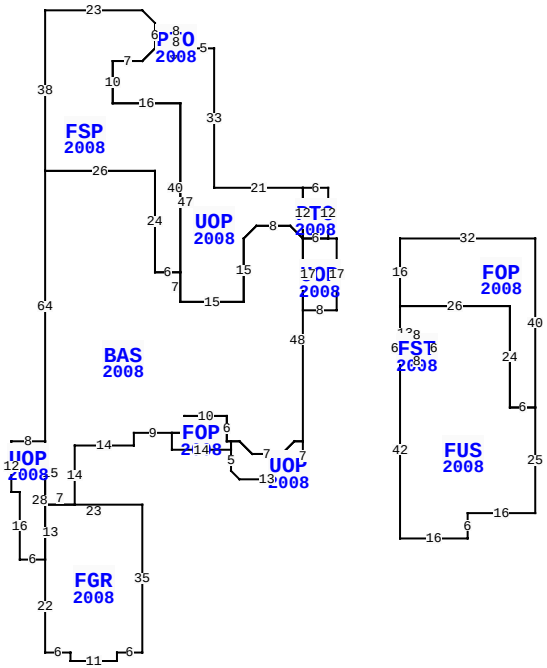

** This building has 13 Sub-Areas

18 SALT MARSH DR, FERNANDINA BEACH

BLD DATE	08/18/2008 DJ	LGL DATE	
XF DATE		LAND DATE	
INC DATE		AG DATE	

NASSAU COUNTY PROPERTY

PAGE 1 of 1 5

VALUATION SUMMARY

VALUATION BY		STANDARD
Tax Group: 5	Tax Dist:	
BUILDING MARKET VALUE		2,010,573
TOTAL MARKET OB/XF VALUE		120,870
TOTAL LAND VALUE - MARKET		650,000
TOTAL MARKET VALUE		2,781,443
SOH/AGL Deduction		0
ASSESSED VALUE		2,781,443
TOTAL EXEMPTION VALUE	HX HB	50,000
BASE TAXABLE VALUE		2,731,443
TOTAL JUST VALUE		2,781,443
NCON VALUE		0
INCOME VALUE		
PREVIOUS YEAR MKT VALUE		2,127,665

PERMIT NUM	DESCRIPTION	AMT	ISSUED
B21004	SCRN ENCLOSURE	6,500	01/01/2008
M13080	MECH OTHER	0	07/01/2007
C19429	CO ISSUED	0	02/01/2007
B19429	NEW CONSTR	529,500	02/01/2007
E18796	ELEC OTHER	2,000	02/01/2007
P12130	OTHER	0	02/01/2007

SALES DATA

OFF RECORD Number	DATE	TYPE INST	Q U	V I	RSN CD	SALE PRICE
2596/1624	10/12/2022	SW	U	I	11	100
GRANTOR: SCHROEDER ROBERT & TE						
GRANTEE: SCHROEDER R TRUST N						
2596/1622	10/12/2022	SW	U	I	11	100
GRANTOR: SCHROEDER R TRUST NO						
GRANTEE: SCHROEDER ROBERT						

BUILDING NOTES

BUILDING DIMENSIONS

UOP=[YR=2008] W2 PTO=[YR=2008] N12 W6 UOP=[YR=2008] W21 N33 W5 PTO=[YR=2008] N4 W8 S4 E8$ W9FSP=[YR=2008] N6 U3 L3 W23 S38 BAS=[YR=2008] S64 UOP=[YR=2008] W8 S12 E2 S16 E6 FGR=[YR=2008] S22 E6 S2 E11 N2 E6 N35 W23 S13$ N28$ S15 E7 N14 E14 N3 E9 FOP=[YR=2008] S4 E14 UOP=[YR=2008] S5 D2 R2 E13 U2 R2 N7 W2 D3 L3 W7 U3 L3 W2S2$ N2 W1 N6 W10 S4 W3$ E3 N4 E10 S6 E3 D3 R3 E7 U3 R3 E2 N48 U3 L3 W8 D3 L3 S15W15 N7W6N24W26$E26S24E6 N40W16N10 E7 U3 R3 $ D3 L3 W7 S10E16S47 E15 N15 U3 R3 E8 D3 R3 N12$ S12 E6$ W6S17E8N17$ PTR=E15 FOP=[YR=2008] E32 S40 FUS=[YR=2008] S25 W16 S6 W16 N42 FST=[YR=2008] N6 E8 S6 W8$ N13 E26 S24 E6$ W6 N24 W26 N16$ W15$.

EXTRA FEATURES

LN	OB/XF CODE	DESCRIPTION	BLD	CAP	L	W	UNITS	UT	Adj R	ADJ UNIT PRICE	ORIG COND	YEAR ON	YEAR ACTUAL	Q	% COND	OB/XF MKT VALUE	NOTES
1	0861	POOL GUNIT	0	100	0	0	700.00	SF	170.00	170.00	100	2008	2008	3	56	66,640	
2	0600	SUMMER KIT	0	100	0	0	1.00	UT	15,000.00	15,000.00	100	2008	2008	3	40	6,000	
3	1126	CB/STC 8"	0	100	25	4	100.00	SF	8.00	8.00	100	2008	2008	3	90	720	
4	0463	FENCE GATE	0	100	0	0	1.00	UT	900.00	900.00	100	2008	2008	3	76	684	
5	0855	CONC PAVER	0	100	0	0	114.00	SF	10.00	10.00	100	2008	2008	3	90	1,026	
6	0855	CONC PAVER	0	100	0	0	2,362.00	SF	10.00	10.00	100	2008	2008	3	90	21,258	
7	0504	FP-ELECTRI	0	100	0	0	2.00	UT	2,000.00	2,000.00	100	2008	2008	3	93	3,720	
8	0911	SCRN RM A	0	100	0	0	1,407.00	SF	17.50	17.50	100	2008	2008	3	40	9,849	
9	0857	SANDSTONE	0	100	0	0	707.00	SF	16.00	16.00	100	2008	2008	3	97	10,973	

LAND DESCRIPTION

TOTAL OB/XF 120,870

LN	USE CODE	CLS	LAND USE DESCRIPTION	CAP	RD	LOC ZONE	FRONT	DEPTH	TOT LND UTS	UNIT TYPE	DT	DPTH FACT	% COND	TOT ADJ	UNIT PRICE	ADJ UNIT PRICE	LAND VALUE	OTHER ADJUSTMENTS AND NOTES	YEAR	DENSITY	DECL	FRZ	YR	CONSRV
1	000116	C	SFR MARSH	100		PUD	0.00	0.00	1.00	LT		1.00	1.00	1.00	650,000.00	650,000.00	650,000							

REVIEW DATE 05/17/2018 BY DJX Total Acres: 0.00 Total Land Value: 650,000 Market: 0 Agricultural: 0 Common: 650,000 PRINTED 08/02/2023 BY SYS