LOT 53
IN OR 1976/1865
LONG POINT #1 PB 5/85-89

HERLIHY THOMAS M SR & LYNN F
9 JUNIPER CT
FERNANDINA BEACH, FL 32034

2023

03-6N-29-00LP-0053-0000

BUILDING CHARACTERISTICS

ELEMENT	CD	CONSTRUCTION
Exterior Wall	17	CB STUCCO 60
Exterior Wall	16	WD FR STUC 40
Roof Structur	08	IRREGULAR 100
Roof Cover	07	CONC TILE 100
Interior Wall	05	DRYWALL 100
Interior Floo	12	HARDWOOD 50
Interior Floo	14	CARPET 50
Air Condition	03	CENTRAL 100
Heating Type	04	AIR DUCTED 100
Bedrooms		3 100
Bathrooms		4.5 100
Frame	02	WOOD FRAME 100
Stories	2.	2. 100
Units		0 100
Quality	04	Quality Level 04
DOR CODE	0100	SINGLE FAMILY
MAP NUM		MKT AREA 10
NEIGHBORHOOD/LOC	10007.00	

AREA TYPE	TOTAL GROSS AREA	PCT OF BASE	TOT ADJ AREA	SUBAREA MARKET VALUE
BAS	2,738	100	2,738	510,360
FGR	759	55	417	77,729
FOP	76	30	23	4,288
FOP	204	30	61	11,371
FOP	289	30	87	16,217
FSP	456	40	182	33,925
FUS	419	100	419	78,101
FUS	1,026	100	1,026	191,246
UOP	12	20	2	373
UOP	12	20	2	373
TOTALS	7,276		5,213	971,698

MARKET ADJUSTMENTS

TYPE	MDL	EFF. AREA	TOT ADJ PTS	EFF. BASE RATE	REPL. COST NEW	AYB	EYB	ECON	FNCT		NORM	% COND
0500	11	5,213	145.3386	207.11	1,079,664	2002	2002	0	0	0	10.00	90.00

1 SFR CUST – 100% - 2016 Heated Area: 4183 HX Base Yr 2016

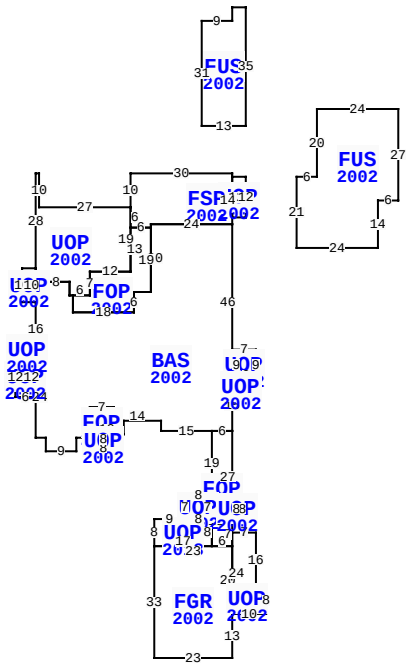

** This building has 20 Sub-Areas

9 JUNIPER CT, FERNANDINA BEACH

BLD DATE		LGL DATE	
XF DATE		LAND DATE	
INC DATE		AG DATE	

NASSAU COUNTY PROPERTY

PAGE 1 of 1 5

VALUATION SUMMARY

VALUATION BY		STANDARD
Tax Group: 5	Tax Dist:	
BUILDING MARKET VALUE		971,698
TOTAL MARKET OB/XF VALUE		37,763
TOTAL LAND VALUE - MARKET		600,000
TOTAL MARKET VALUE		1,609,461
SOH/AGL Deduction		578,047
ASSESSED VALUE		1,031,414
TOTAL EXEMPTION VALUE	HX HB	50,000
BASE TAXABLE VALUE		981,414
TOTAL JUST VALUE		1,609,461
NCON VALUE		0
INCOME VALUE		
PREVIOUS YEAR MKT VALUE		1,196,027

PERMIT NUM	DESCRIPTION	AMT	ISSUED
22016710	XFOB	28,500	11/08/2022
B1707908	REPAIR/RRF	64,500	08/31/2017
M1217542	H/AC	0	08/01/2012
B22568	POOL ENCLOSURE	11,835	06/01/2009
B22413	REMODEL	31,000	04/01/2009
B018257	SWIM POOL	0	05/01/2001

SALES DATA

OFF RECORD Number	DATE	TYPE INST	Q U	V I	RSN CD	SALE PRICE
1976/1865	3/26/2015	WD	Q	I	02	1,190,100
GRANTOR: JERVIS HERBERT H & MA						
GRANTEE: HERLIHY THOMAS M SR						
0931/0430	5/05/2000	WD	Q	V		380,000
GRANTOR: KANE EDWARD J & JOAN						
GRANTEE: JERVIS HERBERT H &						

BUILDING NOTES

BUILDING DIMENSIONS

UOP=[YR=2002] W4 FSP=[YR=2002] N1 W30 S10 UOP=[YR=2002] W27 N10 W1 S28 UOP=[YR=2002] W4 S10 E4 BAS=[YR=2002] S16 UOP=[YR=2002] W1 UOP=[YR=2002] N4 W3 S4 E3 $ W5 S12 E6 N12 $ S24 E3 S4 E9N4E2N1FOP=[YR=2002] E2 UOP=[YR=2002] S4 E8 N4 W8 $ E10 N4 W3 N4 W7 S4 W2 S4 $ N4 E2 N4 E7 S4 E14 S3E15 FOP=[YR=2002] S19 UOP=[YR=2002] W8 S7 UOP=[YR=2018] W9 S8 FGR=[YR=2002] S33 E23 N13 UOP=[YR=2002] E10 N8 W3 N16 W7 S24$ N20 W23$ E17 N8 W8$ E8 N7$ S15 E6 N7 UOP=[YR=2002] E3 N8 W3 S8 $N27 W6 $ E6 N15 UOP=[YR=2002] E1 UOP=[YR=2002] S4 E3 N4 W3 $ E6 N9 W7 S9 $ N46 W24 S20 W5 S6 W18 N5 W1 N4 W8 S4 W2 S2 $ N10 $ S8 E2 N4 E8 S4 E6 N7 E12 N19 $S6 FOP=[YR=2002] S13 W12 S7 W5 S5 E18 N6 E5 N19 W6 $ E6 N1 E24 N14 $ S12 E4

EXTRA FEATURES

LN	OB/XF CODE	DESCRIPTION	BLD	CAP	L	W	UNITS	UT	Adj R	ADJ UNIT PRICE	ORIG COND	YEAR ON	YEAR ACTUAL	Q	% COND	OB/XF MKT VALUE	NOTES
1	0504	FP-ELECTRI	0	100	0	0	1.00	UT	2,000.00	2,000.00	100	2002	2002	3	87	1,740	
2	0812	CONCRETE C	0	100	0	0	1,399.00	SF	4.00	4.00	100	2002	2002	3	83	4,645	
3	0858	SCULP CONC	0	100	0	0	579.00	SF	13.00	13.00	100	2002	2002	3	95	7,151	
4	1126	CB/STC 8"	0	100	0	0	238.00	SF	8.00	8.00	100	2002	2002	3	83	1,580	
5	0861	POOL GUNIT	0	100	0	0	269.00	SF	85.00	85.00	100	2002	2002	3	32	7,317	
6	0877	JACUZZI	0	100	0	0	1.00	UT	1,000.00	1,000.00	100	2002	2002	3	21	210	
7	0911	SCRN RM A	0	100	0	0	960.00	SF	35.00	35.00	100	2009	2009	3	45	15,120	

LAND DESCRIPTION

TOTAL OB/XF 37,763

LN	USE CODE	CLS	LAND USE DESCRIPTION	CAP	RD	LOC ZONE	FRONT	DEPTH	TOT LND UTS	UNIT TYPE	DT	DPTH FACT	% COND	TOT ADJ	UNIT PRICE	ADJ UNIT PRICE	LAND VALUE	OTHER ADJUSTMENTS AND NOTES	YEAR	DENSITY	DECL	FRZ	YR	CONSRV
1	000116	C	SFR MARSH	100		PUD	0.00	0.00	1.00	LT		1.00	1.00	1.00	600,000.00	600,000.00	600,000							

REVIEW DATE 11/27/2018 BY DJ Total Acres: 0.00 Total Land Value: 600,000 Market: 0 Agricultural: 0 Common: 600,000 PRINTED 08/02/2023 BY SYS