LOT 50
IN OR 1954/1609
LONG POINT #1 PB 5/85-89

RAZAVI FEREIDOON
6 JUNIPER CT
FERNANDINA BEACH, FL 32034

2023

03-6N-29-00LP-0050-0000

BUILDING CHARACTERISTICS

ELEMENT	CD	CONSTRUCTION
Exterior Wall	17	CB STUCCO 100
Roof Structur	08	IRREGULAR 100
Roof Cover	08	CLAY TILE 100
Interior Wall	05	DRYWALL 100
Interior Floo	11	CLAY TILE 70
Interior Floo	14	CARPET 30
Air Condition	03	CENTRAL 100
Heating Type	04	AIR DUCTED 100
Bedrooms		3 100
Bathrooms		3.5 100
Frame	02	WOOD FRAME 100
Stories	1.	1. 100
Units		0 100
Quality	03	Quality Level 03
DOR CODE	0100	SINGLE FAMILY
MAP NUM		MKT AREA 10
NEIGHBORHOOD/LOC	10007.00	

AREA TYPE	TOTAL GROSS AREA	PCT OF BASE	TOT ADJ AREA	SUBAREA MARKET VALUE
BAS	3,591	100	3,591	662,390
FGR	836	55	460	84,851
FOP	182	30	55	10,145
FOP	646	30	194	35,785
FSP	374	40	150	27,669
FST	18	55	10	1,845
PTO	12	5	1	184
UOP	36	20	7	1,291
UOP	102	20	20	3,689
UOP	115	20	23	4,242
TOTALS	6,997		4,821	889,273

MARKET ADJUSTMENTS

TYPE	MDL	EFF. AREA	TOT ADJ PTS	EFF. BASE RATE	REPL. COST NEW	AYB	EYB	ECON	FNCT		NORM	% COND
0500	11	4,821	135.5420	193.15	931,176	2003	2013	0	0	0	4.50	95.50

1 SFR CUST – 100% - 2015 Heated Area: 3591 HX Base Yr 2015

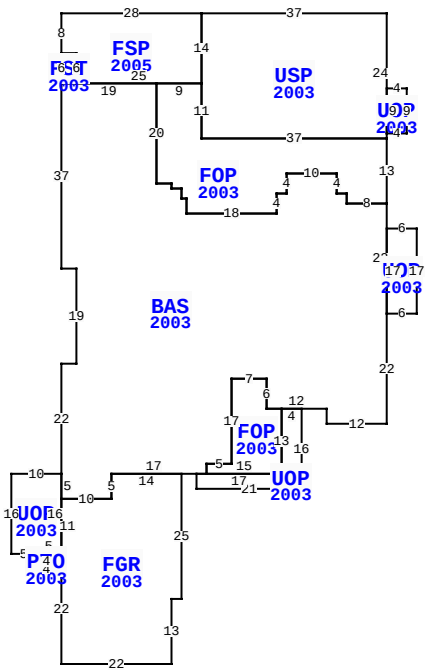

** This building has 12 Sub-Areas

6 JUNIPER CT, FERNANDINA BEACH

BLD DATE		LGL DATE	
XF DATE		LAND DATE	
INC DATE		AG DATE	

NASSAU COUNTY PROPERTY

PAGE 1 of 1 5

VALUATION SUMMARY

VALUATION BY		STANDARD
Tax Group: 5	Tax Dist:	
BUILDING MARKET VALUE		889,273
TOTAL MARKET OB/XF VALUE		42,007
TOTAL LAND VALUE - MARKET		500,000
TOTAL MARKET VALUE		1,431,280
SOH/AGL Deduction		380,273
ASSESSED VALUE		1,051,007
TOTAL EXEMPTION VALUE	HX HB WR	55,000
BASE TAXABLE VALUE		996,007
TOTAL JUST VALUE		1,431,280
NCON VALUE		0
INCOME VALUE		
PREVIOUS YEAR MKT VALUE		1,185,045

PERMIT NUM	DESCRIPTION	AMT	ISSUED
B0310624	XFOB	5,650	01/01/2003
B0209223	NEW CONSTR	348,000	01/01/2002

SALES DATA

OFF RECORD Number	DATE	TYPE INST	Q U	V I	RSN CD	SALE PRICE
1954/1609	12/29/2014	WD	Q	I	02	1,075,000
GRANTOR: TOMPKINS JUNE M						
GRANTEE: RAZAVI FEREIDOON &						
1744/1531	2/10/2011	QC	U	I	11	100
GRANTOR: TOMPKINS MICHAEL E &						
GRANTEE: TOMPKINS JUNE M						

BUILDING NOTES

BUILDING DIMENSIONS

USP=[YR=2003] W37FSP=[YR=2005] W28 S8 FST=[YR=2003] S6 BAS=[YR=2003] S37 E3 S19 W3 S22 UOP=[YR=2003] W10 S16 E5 PTO=[YR=2003] S3 E4 N3 W4 $ E5 FGR=[YR=2003] S22 E22 N13 E2 N25 W14 S5 W10 S11 $ N16 $ S5 E10 N5 E17 UOP=[YR=2003] S3 E21 N16 W4 S13 W17 $ E2 FOP=[YR=2003] E15N13 W3 N6 W7 S17 W5 S2 $ N2 E5 N17 E7 S6 E12 S3 E12 N22 UOP=[YR=2003] E6 N17 W6 S17 $ N22 W8 N2 W2 N4 W10 S4 W2 S4 W18 N3 W1 N2 W2 N1 W3 N20 W19 $ E3 N6 W3 $ E3 S6 E25N14$S14 FOP=[YR=2003] W9 S20 E3 S1 E2 S2 E1 S3 E18 N4 E2 N4 E10 S4 E2 S2 E8 N13 W37 N11 $S11E37 N1 UOP=[YR=2003] E4 N9 W4 S9 $ N24 $.

EXTRA FEATURES

LN	OB/XF CODE	DESCRIPTION	BLD	CAP	L	W	UNITS	UT	Adj R	ADJ UNIT PRICE	ORIG COND	YEAR ON	YEAR ACTUAL	Q	% COND	OB/XF MKT VALUE	NOTES
1	0812	CONCRETE C	0	100	0	0	4,229.00	SF	4.00	4.00	100	2003	2003	3	84	14,209	
2	0855	CONC PAVER	0	100	0	0	1,715.00	SF	10.00	10.00	100	2003	2003	3	84	14,406	
3	0504	FP-ELECTRI	0	100	0	0	1.00	UT	2,000.00	2,000.00	100	2003	2003	3	88	1,760	
4	0861	POOL GUNIT	0	100	0	0	337.00	SF	85.00	85.00	100	2003	2003	3	36	10,312	
5	0877	JACUZZI	0	100	0	0	1.00	UT	1,000.00	1,000.00	100	2003	2003	3	22	220	
6	0600	SUMMER KIT	0	100	0	0	1.00	UT	5,000.00	5,000.00	100	2003	2003	3	22	1,100	

LAND DESCRIPTION

TOTAL OB/XF 42,007

LN	USE CODE	CLS	LAND USE DESCRIPTION	CAP	RD	LOC ZONE	FRONT	DEPTH	TOT LND UTS	UNIT TYPE	DT	DPTH FACT	% COND	TOT ADJ	UNIT PRICE	ADJ UNIT PRICE	LAND VALUE	OTHER ADJUSTMENTS AND NOTES	YEAR	DENSITY	DECL	FRZ	YR	CONSRV
1	000100	C	SFR	100		PUD	0.00	0.00	1.00	LT		1.00	1.00	1.00	500,000.00	500,000.00	500,000							

REVIEW DATE 11/08/2019 BY DJA Total Acres: 0.00 Total Land Value: 500,000 Market: 0 Agricultural: 0 Common: 500,000 PRINTED 08/02/2023 BY SYS